NETWORK RAIL London North Eastern Route

LNE

Week No.
23

PERIODICAL OPERATING NOTICE

CONTAINING

AMENDMENTS TO NATIONAL OPERATIONS PUBLICATIONS
INCLUDING NATIONAL OPERATING INSTRUCTIONS

MISCELLANEOUS INSTRUCTIONS AND NOTICES

INCORPORATING

SUPPLEMENT NO. 76 TO THE LNE ROUTE
SECTIONAL APPENDIX

SATURDAY 05 SEPTEMBER 2026
to
FRIDAY 04 DECEMBER 2026
Inclusive

For additional items during the currency of this Notice, see Section D of the Weekly Operating Notice (WON).

Published quarterly, on the first Saturday of March, June, September, and December.

This notice comprises of 30 pages

For queries regarding the content of this publication contact:
PlanningPublications@networkrail.co.uk

Sectional Appendix Feedback (SAF) Form QR Code

The Sectional Appendix Feedback (SAF) Form is designed for reporting anomalies in the National Electronic Sectional Appendix (NESA), paper copy Sectional Appendices, or other format (e.g. PDF file) Sectional Appendices.

It provides a structured way to log, investigate, and resolve errors.

Examples may include:

- Differences between what is published in NESA and in the corresponding paper copy Sectional Appendix
- Differences between what is published and what is provided on the network (e.g. speed change commencing at a different mileage, platform lengths longer or shorter than what is published).

If the QR code is not working, please use this link here to access the form:
networkrail-networkcapabilityupdatetool.oncreate.app/w/webpage/141GBPTP1

When to use Rail Notices

https://www.railnotices.net/CommonInterface/Default.aspx

Use Rail Notices for planned changes to infrastructure. Examples:

- New or altered infrastructure (e.g. junction renewals, changes to signals, electrification, line speed changes).
- Permanent withdrawal of capability (e.g. plain-lining, temporary speed restriction converted to a permanent speed restriction).

REMEMBER that any proposed changes to infrastructure capability, track layout, speeds, etc. MUST first be established through industry consultation via the Network Change process.

If you are unsure of which is the appropriate process to use, then please use this Sectional Appendix Feedback Form and a WON Approver will be in touch to provide further guidance.

ACKNOWLEDGEMENT SLIP

Please complete the Acknowledgement Slip below (if appropriate), detach it and hand it to your Supervisor/Manager.

I, the undersigned, acknowledge receipt of the Periodical Operating Notice and Supplement No. 76 to the LNE Route Sectional Appendix effective from Saturday 05 September 2026 to Friday 04 December 2026

I undertake to familiarise myself with the contents and observe the instructions therein which apply to me.

Full Name (in capitals): _____

Signature (in full)**:** _____

Location: _____

Date: _____

THIS PAGE IS INTENTIONALLY BLANK

Introduction

This Periodical Operating Notice (PON) composed of two sections:-

Part 1 contains items published for the first time in the PON. Items published in this first section that have not been published in the Weekly Operating Notice (WON) are additionally noted by a vertical line in the margin.

Part 2 contains items previously published in the PON that are still valid.

Items marked * * will not appear in future issues of the PON and a note must be taken of them.

Supplement to the Sectional Appendix

Attached to the back of this Notice are updates to the existing Sectional Appendix in the form of a Supplement. This is not part of the PON. It is a document in its own right. It has been physically attached to the PON to:

- ensure its effective distribution to all users
- reduce the amount of raw materials consumed in its generation and distribution
- reduce costs associated with production

The Supplement is identified as Supplement No. 76 and is dated 05 September 2026. In line with current industry standards items published in the Supplement will not appear in future PONs.

Enquiries concerning amendments to the Sectional Appendix must be e-mailed to the Planning Publications mailbox
PlanningPublications@networkrail.co.uk

Enquiries concerning amendments to the :
NATIONAL OPERATING PUBLICATIONS should be addressed to
STEVE RAY, NETWORK OPERATIONS.

Amendments to the Rule Book and Working Manuals for Railway Staff are produced by Rail Safety & Standards Board.

NETWORK RAIL LNE ROUTE TAKE NO RESPONSIBILITY FOR ANY ERRORS THAT MAY BE CONTAINED IN THESE AMENDMENTS

Enquiries concerning amendments to the Rule Book and Working Manual should be addressed to:

RSSB
The Helicon
1 South Place
London
EC2M 2RB

Email: enquirydesk@rssb.co.uk

RECORDING OF CONVERSATIONS

Telephone calls to Network Rail Signalling locations, Electrical Controls and Operations Controls may be recorded for the purposes of monitoring the quality of safety related information being exchanged and to assist with investigations into incidents.

This publication is printed and distributed by APS Group

Telephone:

0161 495 4515

E-mail:

nrrons@theapsgroup.com

LATE OR NON-DELIVERY

Please contact APS Group if you have not received your PON by 15.00 hours on the Wednesday prior to the operative Saturday of this publication, thus allowing adequate time to expedite tracking and replacement procedures as necessary.

If you receive this publication from your line manager or a local distribution point

arrangement, then please contact them direct and NOT APS Group

Part A - Foreword

A1 Introduction

This document contains new and previously published amendments to National Operations Publications, which are considered too urgent to await a complete reissue of the document concerned.

A2 Scope

This document is primarily used to publish minor changes to National Operations Publications. However, it may also be used to publish material changes that have already been consulted on but do not justify the reissue of a Rule Book module and / or handbook.

A3 Implementation

The publication date of this document is **05 September 2026**.

A4 Technical content

The technical content of this document has been approved by James Webb, Professional Head of Rail Operations, RSSB. Enquiries should be directed to RSSB at https://customer-portal.rssb.co.uk/.

A5 Definitions

Material change

Where duty holders are required by a Railway Group Standard to do something physically different.

Minor change

A minor change comprises of one of the following:

- Typographical errors or changes to administrative details such as telephone numbers, or
- Changes for the purpose of clarification, where there is negligible potential for misinterpretation which diminishes safety, or
- Changes to operational documents affecting only one duty holder, provided that the duty holder consents to those changes.

National Operations Publications

These are Railway Group Standards which set out mandatory requirements for direct application in the workplace and which are subject to frequent changes. These include any modules or handbooks forming part of the Rule Book (GERT8000) or its associated information handbooks with references in the RS500 series.

Periodical Operating Notice

An official document for publishing details of changes to National Operations Publications and local operational publications to the railway industry. This is often referred to as the PON.

Part B - Changes since previous issue

Amendment No	Publication and section
Part C - New amendments to National Operations Publications	
	No new amendments
Amendment No	**Publication and section**
Part D - Previous amendments to National Operations Publications	
	No change to previous amendments

Part C - New amendments to National Operations Publications

No new amendments

Part D - Previous amendments to National Operations Publications

GERT8000 Rule Book

Changes to various modules and handbooks as a result of the term 'manned level crossing' being replaced by 'manually-controlled level crossing'

Explanation of change
It has been pointed out that the use of the term 'manned level crossing' in the Rule Book suggests that the person operating the crossing must be a man. This is not correct and the wording has been changed as necessary to refer to these crossings as 'manually-controlled'.

The modules and handbooks concerned will be reissued over a period. Those listed below will not be reissued in printed format at this stage but were amended as shown from 3 December 2022. Existing copies should be altered in ink to show these changes.

Electronic versions of the modules and handbooks including these changes can be found at www.rssb.co.uk or in the Rule Book App.

Rule Book module or handbook	Section or regulation	Amendment
T3 ERTMS Possession of an ERTMS running line for engineering work where lineside signals are not provided	5.9	Amend 'manned level crossing' to 'manually-controlled level crossing'

Changes to various modules and handbooks as a result of the term 'pilotman' being replaced by 'pilot'

Explanation of change

It has been pointed out that the use of the term 'pilotman' in Rule Book modules P1 *Single line working* and P2 *Working single and bi-directional lines by pilotman* suggests that the person carrying out the role must be a man. This is not correct and the term has been changed to 'pilot'.

The modules and handbooks concerned will be reissued over a period. Those listed below will not be reissued in printed format at this stage but were amended as shown from 3 December 2022. Existing copies should be altered in ink to show these changes.

Electronic versions of the modules and handbooks including these changes can be found at www.rssb.co.uk or in the Rule Book App.

Rule Book module or handbook	Section or regulation	Amendment
T3 ERTMS Possession of an ERTMS running line for engineering work where lineside signals are not provided.	7.2	Amend 'pilotman' to 'pilot'
TS4 Electric token block regulations	2.2 8.1.1 8.2.1 8.6.1	Amend title of module P2 to read *'Working single and bi-directional lines by pilot'*.
TS4 Electric token block regulations	8.1.1 8.1.2 8.2.1 8.2.2 8.2.3 8.5 8.6.1 8.6.2 8.7 8.8	Amend 'pilotman' to 'pilot'
TS5 Tokenless block regulations	8.1 8.2	Amend title of module P2 to read *'Working single and bi-directional lines by pilot'*
TS5 Tokenless block regulations	8 8.1 8.2 8.3 8.4 8.5 8.5.2	Amend 'pilotman' to 'pilot'
TS7 No-signaller token regulations	2.2 8.1.1 8.2.1 8.3.1	Amend title of module P2 to read *'Working single and bi-directional lines by pilot'*

TS7 No-signaller token regulations	3.1 8.1.1 8.1.2 8.2.1 8.2.2 8.2.3 8.3.1 8.3.2 8.4	Amend ‘pilotman’ to ‘pilot’
TS8 One-train working regulations	8.1 8.4.1	Amend title of module P2 to read *‘Working single and bi-directional lines by pilot’*
TS8 One-train working regulations	3.1 3.2 8 8.1 8.2 8.3 8.4.1 8.4.2	Amend ‘pilotman’ to ‘pilot’

Handbook RS524 List of Dangerous Goods and their United Nations numbers

Table 1

Explanation of change
The 2023 RID regulations include a number of changes to the details of UN numbers which are as shown below.

Delete: the following which ceased to be valid after 30th June 2023:

UN Number	Substance	Dangerous Goods Class	Subsidiary Hazard(s)	Packing Group
1169	Extracts, aromatic, liquid			

Amend: the following as shown:

UN Number	Substance	Dangerous Goods Class	Subsidiary Hazard(s)	Packing Group
1197	Extracts, liquid for flavour or aroma	3		II, III
1345	Rubber scrap or Rubber shoddy, powdered or granulated not exceeding 840 microns and rubber content exceeding 45%	4.1		II
1872	Lead dioxide	5.1		III
1891	Ethyl bromide (Bromoethane)	3	6.1	II
2015	Hydrogen peroxide, stabilized or hydrogen peroxide, aqueous solution, stabilized with more than 70% hydrogen peroxide	5.1	8	I

Add: the following new entry:

UN Number	Substance	Dangerous Goods Class	Subsidiary Hazard(s)	Packing Group
3550	Cobalt dihydroxide powder, containing not less than 10% respirable particles	6.1		I

Handbook RS524 List of Dangerous Goods and their United Nations numbers

Table 1

Explanation of change
The 2025 RID regulations include a number of changes to the details of UN numbers which are as shown below.

Amend: the following as shown:

UN Number	Substance	Dangerous Goods Class	Subsidiary Hazard(s)	Packing Group
1835	Tetramethylammonium hydroxide aqueous solution	8		II, III
2870	Aluminium borohydride in devices	4.2	4.3	
3165	Aircraft hydraulic power unit fuel tank (containing a mixture of anhydrous hydrazine and methyl hydrazine) (M86 fuel)	3	6.1 8	
3292	Batteries containing metallic sodium or sodium alloy cells, containing metallic sodium or sodium alloy	4.3		
3423	Tetramethylammonium hydroxide solid	6.1	8	I

Add: the following new entries:

UN Number	Substance	Dangerous Goods Class	Subsidiary Hazard(s)	Packing Group
3551	Sodium ion batteries with organic electrolyte	9		
3552	Sodium ion batteries contained in equipment or sodium ion batteries packed with equipment, with organic electrolyte	9		
3553	Disilane	2.1		
3554	Gallium contained in manufactured articles	8		
3555	Trifluoromethyltetrazole-sodium salt in acetone, with not less than 68% acetone, by mass	3		II
3556	Vehicle, lithium ion battery powered	9		

3557	Vehicle, lithium metal battery powered	9		
3558	Vehicle, sodium ion battery powered	9		
3559	Fire suppressant dispersing devices	9		
3560	Tertramethylammonium hydroxide aqueous solution with not less than 25% tetramethylammonium hydroxide	6	8	I

Part E - Amendments summary

GERT8000 Rule Book

Module, Issue and Section amended	Number	Published
Various modules and handbooks	01/22	December 2022
Various modules and handbooks	02/22	December 2022
Handbook RS524 List of Dangerous Goods and their United Nations numbers, issue 1, table 1	03/23	March 2023
Handbook RS524 List of Dangerous Goods and their United Nations numbers, issue 1, table 1	03/24	December 2024

Miscellaneous Instructions

SIGNAL BOX AND GSM-R TELEPHONE NUMBERS
LONDON NORTH EASTERN

Note: GSM-R calls and messages will been diverted to another signal box/panel if:

- the signal box has closed ('switched out') while the line remains open
- the panel/workstation is unstaffed during 'Light Duty Working'.

Signal Box	Internal	Alternative	Signal Prefix	GSM-R Contact Number
Allington	03 62162	01302 362162	AL	74 8140 01
Alnmouth	03 84640	01665 830960	A	74 8220 01
Alrewas	085 84474	0330 8584474	AS	74 6025 01
Ancaster	TBC	03308584568	AR	74 8141 01
Ashington				
Ashwell	05 68618	0330 8584740	AL	74 7125 01
Aycliffe TSC	08526014	033085 26014	T	N/A
Bardon Hill	085 25100	0330 8525100	BH	74 7124 01
Bardon Mill (usually switched out)	NO PHONE		BM	
Barnsley	03 37096	01226 730808	BY	74 8100 01
Barton Hill	085 20177	03308 520177	BH	74 8257 01
Batley	03 39734	01132 479734	B	74 8110 01
Beckingham	03 62588	01302 362588	B	74 8163 01
Bedlington North	03 79914	01670 530085	BN	74 8297 01
Bedlington South	03 79915	01670 823444	BS	
Bedford Luton North Jn to Oakley.	085 84899 (0330 858 4899)	004 8582 (020 7644 8582)		
Beighton Station Jn.	03 37389	01142 889010	BX	74 7149 01
Bellwater Jn	N/A	01205 270513	BJ	74 8122 01
Beverley	08587752	3308587752	BS	74 8260 01
Blaydon	03 82412	0191 4147704	BN	74 8224 01
Boston West Street Junction	N/A	01205 352510	WS	74 8124 01
Brampton Fell	03 79921	01697 73306	BF	74 6451 01
Bridlington	03 79910	01262 670378	BN	74 8259 01
Brigg	03 66485	01472 266485	B	74 8238 01
Castleford	08588056	03308588056	CD	74810801
Cattal	03 79903	01423 331471	C	74 8301 01
Caverswall	05 30419	01270 530419	CL	74 7120 01
Clipstone	TBC	03308588038	C CJ	74 7157 01
Common Road	085 20176	03308 520176	-	-
Corby Gates	085 87923	01228 561244	CG	74 6450 01
Crag Hall	03 79912	01287 678209	C	74 4241 01
Cricklewood	00 48653	0330 852 0793	CD	74 7167 01
Cutsyke Jn	03 39278	01132 479278	CJ	74 8119 01
Creswell	TBC	03308588043	E	74 7126 01

Miscellaneous Instructions- Continued

SIGNAL BOX AND GSM-R TELEPHONE NUMBERS - Continued
LONDON NORTH EASTERN – Continued

Signal Box	Internal	Alternative	Signal Prefix	GSM-R Contact Number
DERBY, EAST MIDLANDS				
CONTROL CENTRE				
Burton WS (DY)	05 63689	0330 85 87436	DY	74 7106 01
Elford to Sunny Hill (Exclusive)/				
Chellaston line/N.Staffs line				
Chesterfield Workstation	08 552427	01332 442427	PK, RT, SS, ST, TC, TD	74 7111 01
Clay Cross Tunnel/Morton Jn				
to Tapton Jn (inclusive)				
Erewash Workstation	08 552421	01332 442421	PK, RT, SS, ST, TC, TD	74 7110 01
Trent East Jn (excl) to Clay				
Cross North Jn (excl) &				
Kirkby Lane End Jn (excl)				
Kettering Workstation	085 52402	01332 442402	LR	74 7153 01
Sharnbrook Jn (excl) /	05 68040			
Hinkley to Wigston North Jn				
Leicester Workstation	085 52403	01332 442403	LR	74 7154 01
Knighton Jn to	05 68245			
Loughborough North Jn /				
Bagworth and Syston South				
/ North to Frisby (excl)				
Mansfield Workstation	085 52396	01332 442396	KS, MS	74 7155 01
Lincoln Street to				
McKenzies UWC				
Netherfield Workstation	085 52401	01332 442401	NN, GN	74 7104 01
Nottingham East Jn. (excl)				
To Bulcote / Bingham Road				
Nottingham Workstation	085 52399	01332 442399	MS, NN, RT, TN	74 7105 01
Attenborough Station (excl)				
To Nottingham East Jn				
Mansfield Jn to Trowell				
South Jn. (excl) / Lincoln				
Street (excl)				
Trent Workstation	085 52395	01332 442395	SS,ST,TC,TD,TN	74 7109 01
Loughborough North Jn. excl) to				
Castle Donnington /Spondon (excl) /				
Attenborough Station.				
Derby (DY) Centre Panel -	05 63688	0330 85 87437	DY, TD,DC, DW & EC	74 7114 01
Sunny Hill – (Inclusive) Derby station				
/ Spondon / Etches Park to				
Ambergate / Matlock / Wingfield.				
Diggle	05 85110	01457 873762	DE	74 6472 01

Miscellaneous Instructions- Continued

SIGNAL BOX AND GSM-R TELEPHONE NUMBERS - Continued
LONDON NORTH EASTERN - Continued

Signal Box	Internal	Alternative	Signal Prefix	GSM-R Contact Number
DONCASTER				
Duty Shift Manager	**08586066**	**033 08586066**	D	74 8205 01
Stoke Tunnel – B. Bay LC Doncaster Panel 1 -100 m – 139m 71ch	08586055 08586056 08586057	08586055 08586056 085860577	D	74 8200 01
Botany Bay LC - Belmont Firbeck Jn - St Caths Jn Black Carr - Park Drain Doncaster Panel 2 139m 71ch – 154m 36ch	08586058 08586054	033 08586058 033 08586054	D	74 8201 01
Belmont - Arksey LC Kirk Sandall Jn - Marshgate Jn Conisbrough Tunnel - St - James Jn Marshgate Jn - Bentley LC Doncaster Panel 3 154m 36ch – 158m 02ch	08586061	033 08586061	D	74 8202 01
Arksey LC - Balne LC Womersley - Shaftholme Kirk Sandall - Markham Doncaster Panel 4 157m 52ch – 160m	08586059	033 08586059	D	74 8203 01
Thorne N. - K. Sandall Jn Thorne Jn - Keadby Doncaster Panel 5 1m 04ch – 18m 13ch	08586060 08586062	033 08586060 033 08586062	D	74 8204 01
Doncaster - Skellow Jn - Stainforth Jn	08586060	033 08586060	D	
Driffield	03 79911	01377 257751	D	74 8261 01
Eastfield	03 59251	01733 297251	E	74 8168 01
Egginton Jn	05 65407	01332 265407	EN	74 7115 01
Elmton & Creswell	03 66647	01909 720277	E	74 7126 01
Ferrybridge Panel 1 (Knottingley/Ferrybridge)	03 75156	01904 525156	FE	74 8114 01
Ferrybridge Panel 2 (Hensall/Sudforth Lane)	03 75128	01904 525128	FE	74 8114 01
Fine Lane Crossing	085 84476	0330 8584476		
Foley Crossing	05 30367	01782 320798	FY	74 7121 01
Freemans	03 84334	01670 520008	F	74 8310 01
Frisby	05 68396	0330 8525134	F	74 7139 01
Gainsborough Central	03 66391	07515 620680	GC	74 8241 01
Gainsborough Trent Jn	085 84998	03308 584998	C	74 7109 01
Gascoigne Wood	03 75553	01904 525553	GW	74 8115 01
Goole	03 62878	01405 761959	G	74 8271 01
Goole Bridge	03 62848	01430 430012	GB	74 8272 01
Goxhill	03 65289	01302 357659	G	74 4237 01
Grangetown	03 85260	01325 345260	G	74 8276 01
Great Coates No.1	03 66259	(UN-MANNED)	GC	74 8228 01
Haltwhistle	03 79922	01434 320232	HW	74 6453 01
Hammerton	03 79902	01423 330250	H	74 8300 01
Harrogate	03 79906	01423 528735	LH	74 8304 01
Haydon Bridge	03 79923	01434 684610	HB	74 6455 01

Miscellaneous Instructions- Continued

SIGNAL BOX AND GSM-R TELEPHONE NUMBERS - Continued
LONDON NORTH EASTERN - Continued

Signal Box	Internal	Alternative	Signal Prefix	GSM-R Contact Number
Heaton Control Tower	03 84795	0191 2214795	CT	
Heckington	TBC	03308584569	HN	74 8126 01
Heighington	08526008	033085 26008	H, S, T	74 8283 01
Hellifield	03 31736	01729 851387	HD	74 6425 01
Hessle Road	08588048	03308588048	HR	74826201
Hexham	03 82506	01434 609126	HE	74 6456 01
Hilton Crossing	05 65426	01332 264526	HE	74 6456 01
Holton-le-Moor	03 66487	01673 828998	HM	74 8243 01
Horbury Jn	03 39912	01132 479912	HJ	74 8106 01
Hubberts Bridge	N/A	01205 290576	HB	74 8125 01
Hutton Bonville TSC	08526018	033085 26018	Y, T	N/A
Hull Paragon	08588051	03308588051	HP	74826301
Immingham Rec Sidings	03 65280	01469 578028	IR	74 8229 01
Immingham West Jn.	03 65281	01463 572967	IW	74 8230 01
Keadby Canal	03 66479	01472 266479	N/A	N/A
Kentish town St Pancras (HL)-/- dock in north to Belsize tunnel	08584896 (0330 858 4896)	085 86421 (0330 858 6241)		
Ketton	03 59389	0330 8525590	K	74 7150 01
Kirkham Abbey	03 73201	01653 618013	KA	74 8256 01
Kiveton	TBC	03308584990	KS	74 8244 01
Kirton Lime Sidings	03 66409	01909 536631	K	74 8239 01
Kiveton Park	03 66645	01909 536645	KS	74 8250 01
Knaresborough	03 79904	01423 860260	K	74 8302 01
Langham Jn	05 68617	0330 8525139	LN	74 7156 01
Langworth	03 66378	01522 753702	L	74 8244 01

Miscellaneous Instructions- Continued

SIGNAL BOX AND GSM-R TELEPHONE NUMBERS - Continued
LONDON NORTH EASTERN - Continued

Signal Box	Internal	Alternative	Signal Prefix	GSM-R Contact Number
LINCOLN CONTROL				
CENTRE				
City Workstation #1	03 66348	01472 266348	BL/LG/SL	74 8155 01
Metheringham (excl) to East Holmes Jn (inclusive)		01522 787533		
East Workstation # 3	03 66344	01472 266344	WS/SL	74 8166 01
Gosberton (excl) to Metheringham (inclusive)		01522 533559		
South Workstation # 4	03 66355	01472 266355	WS	74 8157 01
Werrington Jn (excl) to Gosberton (inclusive)		01522 536298		
West Workstation.#2	03 66347	01472 266347	LG NL	74 8156 01
East Holmes Jn (excl) to G. Trent E JN & C. Willingham (excl) to Hykeham		01522 787530		
Lichfield TV Jn SB	085 55726	01543 410191	TV	74 6026 01
Longbeck	03 85453	01325 345453	L	74 4240 01
Low Gates	08526021 08526019	033085 26021 033085 26019	LG, Y	74 8280 01
Low Row	03 79924	01697 746242	LR	74 6452 01
Maltby Colliery	03 62596	01709 815106	M	74 7145 01
Malton	03 73204	01904 523204	M	74 8255 01
Mantle Lane	085 84300	0330 8584300	ML	74 7163 01
Manton Jn	05 68605	0330 8586233	MJ	74 7165 01
Melton Mowbray	05 68248	0330 8525581	MN	74 7166 01
Middlesbrough	03 85317	01325 345317	M	74 8274 01
Milford	N/A	01904 525527	M	74 8109 01
Moira West Jn (MW)	085 84920	03308584920	MW	74 7169 01
Morpeth	03 84340	01670 503575	M	74 8219 01
Northorpe	(03 66420 faulty)	07710 938240	N	74 8240 01

Miscellaneous Instructions- Continued

Nunthorpe	03 85449	01642 324768	N	74 8273 01
Northallerton TSC	08526018	033085 26018	Y, T	N/A
Oakham	05 68613	0330 8525138	OM	74 7162 01
Oxmarsh Crossing	03 65209	01469 563209	OM	74 4238 01
Redcar	03 85452	01325 345452	R	74 8277 01
Duty Shift Manager	085 84004	0330 858 4004		74 8139 01
Peterborough South Panel				
Sandy – Holme LC	085 25180	0330 852 5180	P	74 8137 01
Holme LC – Peterborough station south	085 25182	0330 852 5182		
Peterborough North Panel				
Peterborough Station south – Tallington LC	085 25181	0330 852 5181	P	74 8137 01
Tallington LC - Stoke	085 25179	0330 8525179	P	74 8138 01
Poppleton	03 73730	01904 523730	P	74 8299 01
Prince of Wales	03 75137	01904 525137	P	74 8116 01
Preston Panel A	05 82270	01772 551 270	PN	74 3546 01
Preston Panel B	05 82266	01772 551 266	PN	74 3547 01
Preston Panel C	05 82265	01772 551 265	PN	74 3548 01
Preston Panel D	05 82605	01772 551 605	PN	74 3549 01
Prudhoe	03 82502	01661 835270	PE	74 8222 01
Pyewipe Road	03 66237	(UN-MANNED)	P	74 8227 01
Rauceby	TBC	03308525003	RY	74 8142 01
Redcar Central	03 85452	01325 345452	R	74 8277 01
Roddige Crossing	085 84477	0330 8584477	N/A	N/A
Scropton	085 84094	0330 8584094	SN	74 7117 01
Scunthorpe	03 66461	01472 266461	S	74 8245 01/74 4239 01
Seamer	03 73212	01904 523212	SR/YS	74 8253 01
Selby	03 75528	01904 525528	S	74 8270 01
Shildon	03 83205	01388 777958	S	74 8282 01
Shirebrook Jn	TBC	03308588040	SJ	74 7122 01
Sibsey			S	74 8123 01
Skegness	N/A	01754 764859	S	74 8120 01
Sleaford East	03 62179	01529 415808	SE	74 8145 01
Sleaford West	03 62154	01529 307476	SW	74 8146 01
Starbeck	03 79905	01423 881503	S	74 8303 01
Strensall	085 20175	03308 520175	S	74 8258 01
Sudbury	085 84908	0330 8584098	SY	74 7118 01
Swinderby	03 66396	01522 869481	S	74 8164 01
Tees	03 85237	01325 345437	TY	74 8278 01
Thoresby Colliery Jn	03 66764	01623 824627	T	74 8313 01
Thorpe Culvert	N/A	01754 880385	TC	74 4236 01
THREE BRIDGES ROC				
(TWH) Core Central Workstation Farringdon (EXCL) / St Pancras to Dock Jn	085 75367	01293 621367	TWH	74 3325 01
(TVS) Core South Workstation Farringdon (INC) to Loughborough Jn / Elephant and Castle	085 75369	01293 621369	TVS	74 3326 01

Miscellaneous Instructions- Continued

SIGNAL BOX AND GSM-R TELEPHONE NUMBERS - Continued
LONDON NORTH EASTERN - Continued

Signal Box	Internal	Alternative	Signal Prefix	GSM-R Contact Number
Thrumpton	08587753	03308587753	TN	74824901
Tutbury	05 64127	01332 264127	TY	74 7116 01
Tweedmouth	03 84440	0191 2214440	TW	74 8221 01
Thoresby	TBC	03308588039	T	74 8313 01
Tursdale TSC	08526000	033085 26000	T	N/A
TYNESIDE				
Tyneside ROC Duty Shift Manager	03 82670	0191 2213670		
Tyneside ROC Ashington Workstation	085 86238	03308 586238	BA	74 8225 01
Tyneside ROC Darlington Workstation N. Northallerton T970/T971 to Chester Moor T283/T286.	03 82816	0191 2330446	T	74 8216 01
Tyneside ROC Gateshead Workstation Chester Moor T281/T284 , Blaydon T266/T267 to KEB T241/T243/T245/T247, HL via Greensfield T547/T549 , Heworth T58/T57.	03 82566	0191 2330447	T	74 8215 01
Tyneside ROC Newcastle Workstation KEB T481/T483/T485/T487 to HL via Station T522/T524, Plassey T671/T674	03 82662	0191 2330448	T	74 8214 01
Tyneside ROC Sunderland Workstation Heworth T63/T64 to Ryhope T6203/T6204, + South Hylton and Tyne Dock branches.	03 82369	0191 2213369	T	74 8217 01
Uffington	03 59429	0330 8584060	UN	74 7186 01
Uttoxeter	085 84095	03308584095	UR	74 7119 01
Uttoxeter Fax	085 84100	0330 8584100		
Wainfleet	N/A	01754 880365	W	74 8121 01
Wakefield Kirkgate	03 39928	01132 479928	WK	74 8107 01
Weaverthorpe	03 73208	01904 523208	W	74 8254 01
WEST HAMPSTEAD (WH)				
Belsize tunnel to elstree tunnel	085 84897 (0330 858 4897)	004 8577 (020 7644 8577)		
Whissendine	03 85466	0330 8584738	N	74 8287 01
Whitehouse				
Wickenby				
Winning				
Woodburn Jn				
Woodhouse Jn				
Woolley Coal Siding				
Worksop				
Wyfordby Crossing	05 68358	0330 8525130		
Wylam	03 82501	01661 853547	WM	748 223 01
Wymondham Crossing	05 68278	0330 8584739		
Worksop	TBC	03308521569 03308525170	WP	74 7127 01

Miscellaneous Instructions- Continued
SIGNAL BOX AND GSM-R TELEPHONE NUMBERS - Continued
LONDON NORTH EASTERN - Continued

Signal Box	Internal	Alternative	Signal Prefix	GSM-R Contact Number
York Rail Operating Centre (YROC)				
YORK ROC				
Shift Signalling Manager (Kings Cross Sub-ROC)	085 42108 085 42107	033 08542108 033 08542107	YA, K	74 8151 01
Hitchin Workstation		020 89290508	K	74 8136 01
Langley Workstation		020 89290505	WL, K	74 8135 01
Wood Green Workstation		020 73144137	K	74 8150 01
Finsbury Park Workstation		020 89290503	K	74 8133 01
Kings Cross Workstation		020 89290502	YA, K	74 8132 01
Shift Signalling Manager (Sheffield Sub-ROC)	033 085 42008	033 085 42008		74 8159 01
Hartlepool Workstation	085-42009	033-085-42009	NS, NF & RG	74 8281 01
Halifax Workstation				
Weasel Hall Tunnel (Inclusive) and Greetland Jn (Exclusive) to Bradford Interchange (Inclusive). Bradford Interchange (Inclusive) to Holbeck Jn (Exclusive)	085-42007	033-085-42007	HG, MM, DH, HB	74 8152 01
Huddersfield Workstation				
Standedge Tunnel (Inc) and Greetland Jnc (Incl) to Dewsbury Station and Horbury Junction SB (Exc)	085-42005	033-085-42005	HU, DH, HM	74 8154 01
Clayton West Junction (Incl) to Huddersfield Station				
North Lincolnshire WS 1	085-42003	033-085-42003	BD, BG, BL, CB, B	74 8158 01
Brocklesby West Jn (Incl) to Brigg (Excl)				
Wrawby Jn (Incl) to Holton le Moor (Excl)				
Wrawby Jn (Incl) to Foreign Ore Branch Jn (Excl)				
North Lincolnshire WS 2				
Cleethorpes to Brocklesby East Jn (Excl)	085-42004	033-085-42004	ST, P, CB, MB	74 8159 01
Ulcerby North Jn (Inc) to Goxhill SB (Excl)				
Ulceby North Jn to Humber Road Jn				
Immingham East (Excl) to Pyewipe Road SB (Excl) and Immingham reception				
Marsh West Jn to Great Coates No 1 Signalbox (Excl)				
Brocklesby West Jn (Excl) to Ulceby North Jn (Incl)				
Rotherham WS Hexthorpe Junction (exclusive), Bolton-Upon-Dearne (inclusive) Tapton Junction (exclusive) Woodburn (exclusive) Beighton Jnc (Exclusive) and Meadowhall (Exclusive) Barrow Hill, Masborough and Rotherham Central	085-42002	033-085-42002	S	74-8161-01
Sheffield WS Sheffield Station. Totley Tunnel East (exclusive), Dronfield (inclusive) and Tapton Junction (exclusive). and Meadowhall (Inclusive)	085-42001	033-085-42001	S	74-8160-01
YORK ROC Brough WS Howden (exclusive) to Hessle (exclusive) and Goole Bridge (exclusive) to Gilberdyke Jn (inclusive)	085-42006	033-085-420-06	TG, SG, GH	74-8153-01
Signaller Shift Manager (Leeds Sub-ROC)	03 72757	01904 644252		74 8213 01

Miscellaneous Instructions- Continued
SIGNAL BOX AND GSM-R TELEPHONE NUMBERS - Continued
LONDON NORTH EASTERN - Continued

Signal Box	Internal	Alternative	Signal Prefix	GSM-R Contact Number
York North Workstation	0330 853 5772	0330 854 2382	Y	74 8206 01
(Skelton to Northallerton)				
York Station Workstation	0330 853 5773	0330 854 2381	Y	74 8207 01
(Heck to York Station, also				
Scarborough Branch)				
YROC Middlesbrough Workstation	085 42010	033 085 42010	DS, MW	74 8274 01
Leeds East Workstation	0330 853 5771	0330 854 2378	L	74 8208 01
Leeds East Assist Workstation	0330 853 5770	0330 854 2349	CF	74 8209 01
Leeds North West Workstation	0330 853 5776	0330 854 2376	L	74 8211 01
Leeds West Workstation	0330 853 5774	0330 854 2377	L, S	74 8210 01
(Leeds W. Jn - Armley Jn /				
New Pudsey / Cottingley				
Ardsley Tun / Woodlesford)				
Leeds Ardsley Workstation	0330 853 5775	0330 854 2380	L	74 8212 01
(Ardsley Tun – S. Elmsall				
Goldthorpe – South Kirkby Jn)				
St Pancras (HL) / Dock Jn North to Oakley.	085 84900 (01332 442478)	085 84900 (0330 858 4900)		
Shift Signaller Manager				

All Drivers are reminded to use the above numbers in order to contact Signalling staff on NRN radio.

GSM-R - ELECTRICAL CONTROL ROOM (ECR) CONTACT NUMBERS

ELECTRICAL CONTROL ROOM	GSM-R CONTACT NUMBER
ECO York	74 4081 03
ECO Derby	NO GSM-R CONTACT NUMBER
Emergency: 178 or 085 40970 / 033 085 40970 085 49150 / 033 085 49150 No fax derbyecr@networkrail.co.uk Covers City Thameslink / London St. Pancras High Level (domestic platforms 1-4) to Kettering North Jn / Corby	

ELECTRICAL CONTROL ROOM	GSM-R CONTACT NUMBER	
ECR YORK		
Emergency: 173 + 174 / 0845 6020 173 + 0845 6020 174 york.ecryork@networkrail.co.uk	03 75622 / 01904 525 622 0375952/01904525952	No fax
Planning Office yorkecr.planning@networkrail.co.uk	085 42185 / 033 085 42185 085 42186 / 033 085 42186	No fax
From 27th May 2023 City Thameslink / London St. Pancras Hi controlled by new ECR at Derby, see above.	High Level (domestic platforms 1-4	to Kettering North Jn / Corby now

Miscellaneous Instructions- Continued

GSM-R – ROUTE CONTROL CONTACT NUMBERS

NETWORK RAIL OPERATIONS CONTROL	GSM-R CONTACT NUMBER
Route Control Manager London North Eastern	74 3081 02
Route Control Manager East Midlands	74 3072 02

OPERATIONS CONTROL OFFICE TELEPHONE (AND FAX) NUMBERS – MIDLANDS

NETWORK RAIL CONTROL		**BRT**	**BT**
Route Control Manager		085 54587	0121 345 6587
Duty Control Manager		085 54540	0121 345 6540
Fax		085 54644	0121 345 644
Emergency Line		**085 54665**	**0121 345 6665**
Internal Emergency		**085 54650**	**0121 345 6650**
External Emergency			**0121 345 6249**
Control Fax Numbers		085 54641	0121 345 6641
		085 54642	0121 345 6642
		085 54643	0121 345 6643
EAST MIDLANDS CONTROL	**INTERNAL**	**EXTERNAL**	**FAX**
ROUTE CONTROL MANAGER	**085-52400**	**01332-442400**	**085-52369, 01332-442369**
Line 2	085-52312	01332-442312	
			085-52370,
TRAIN RUNNING CONTROLLER	**085-52316**	**01332-442316**	**01332-442370**
Line 2	085-52317	01332-442317	
			085-52362,
INCIDENT CONTROLLER	085-52324	01332-442324	**01332-442362**
Line 2	085-52325	01332-442325	
			085-52362,
TECHNICAL SUPPORT ENGINEER	085-52323	01332-442323	**01332-442362**
EXTERNAL EMERGENCY	056-2333	01332-262333	
TEAM ORGANISER	085-52322	01332-442322	
CURRENT OPERATIONS MANAGER	085-52309	01332-442309	
POSTAL ADDRESS			
EAST MIDLANDS CONTROL CENTRE			
NETWORK RAIL			
BATEMAN STREET			
DERBY			
DE23 8JQ			

Miscellaneous Instructions- Continued

NETWORK RAIL LONDON NORTH EASTERN OPERATIONS CONTROL OFFICE TELEPHONE (AND FAX) NUMBERS

LONDON NORTH EASTERN RAILWAY (LNER)

Pre-ICC Route Controllers	Internal Phone	External Phone	Fax Internal	Fax External
Route Control Manager	085 - 35031	01904 - 718031	085 - 35003	01904-718003
Incident Controller East Coast	085 - 35030	01904 - 718030	085 - 35002	01904-718002
Incident Controller North East	085 - 35029	01904 - 718029	085 - 35002	01904-718002
Incident Controller West Yorks	085 - 35028	01904 - 718028	085 - 35001	01904-718001
Incident Controller Central	085 - 35027	01904 - 718027	085 - 35001	01904-718001
Incident Controller Infrastructure	085 – 35015	01904 - 718015	085 - 35004	01904-718004
Incident Support Controller East Coast / North East	085 - 35021	01904 - 718021	085 - 35002	01904-718002
Incident Support Controller West Yorks / Central	085 - 35024	01904 - 718024	085 - 35001	01904-718001
Train Running Controller Freight	085 - 35025	01904 - 718025	085 - 35006	01904-718006
Train Running Controller Passenger	085 - 35023	01904 - 718023	085 - 35006	01904-718006
VSTP Section (1)	085 - 35012	01904 - 718012	085 - 35005	01904-718005
VSTP Section (2)	085 - 35013	01904 - 718013	085 - 35005	01904-718005
Technical Support Engineer	085 - 35016 085 - 35058	01904 – 718016 01904 – 718058 01904 – 525745	085 - 35004	01904-718004

SERVICE DELIVERY TEAM AT YORK ROC TELEPHONE NUMBERS

The following contact numbers should be used for contacting the LNER Delivery Team.

In an emergency, or where the safety of the line is affected, *ALWAYS* contact the controlling signaller first.

Post	BT	Internal
GSM-R Contact Number (Driver Helpline)		037 5726
Emergency Line	01904 718111	085 35111
Duty Operations Mgr	01904 718124	085 35124
Resource Controller	01904 718127	085 35127
Train Crew controller	01904 718121	085 35121
Customer Service Controller	01904 718126	085 35126
Performance Analyst	01904 718122	085 35122
Maintenance Controller	01904 718129	085 35129
Drivers Emergency Help Line	01904 718125	085 35125

All telephone calls to the London North Eastern Railway Service Delivery Team at York ROC, including the GSM-R, are digitally recorded.

Miscellaneous Instructions- Continued

BRITISH TRANSPORT POLICE

SENTINEL HOTLINE

The telephone number for the SENTINEL Hotline for verifying PTS/IWA/COSS/PC/PICOP competencies is 0330 7262222. Please note that:

- Calls are charged at the normal rate and **not** at 60p/minute.
- All callers will receive a message warning that the call will be charged at 60p/minute. This is an OFTEL requirement and callers using this number should disregard this message.

Electrical Control Room	Internal Phone		External Phone
	Short Code #	**Railway ETD**	
Cathcart	176	04 53989/ 90 04 56399/ 62695	0141 632 3688 0141 632 5724
Lewisham	177	00 28400	0208 692 6786
Romford	175	00 57980/ 81/ 82	01708-730292 01708-730314
Rugby (including former Willesden area)	177 & 172	05 06422/ 533/ 47/ 46	01788 576256/ 57 01788 555422
York (North of North Muskham neutral section at Newark)	173	03 74691/ 962/ 963/ 872/ 5622	01904 525622
York (Sth of Nth Muskham At Newark)	174	03 75836/ 7 03 74902/ 06 / 03 75952	01904 525836
Derby between City Thameslink / St. Pancras (High Level) & Kettering North Jn/Corby)	178	085 49150 085 40970 (emergency)	0330 85491 0330 854 0970 (emergency)

* If busy use the “P” button to obtain priority call.
\# For emergency purposes only. Not implemented over the complete ECR area

THIS PAGE IS INTETIONALLY BLANK

List of Module Pages and Dates

Page	Date Last Changed
1	**05 September 2026**
2	**05 September 2026**
3	07 December 2024
4	07 December 2024
5	07 December 2024
6	07 December 2024
7	02 December 2023
7A	02 December 2023
7B	02 December 2023
7C	02 December 2023
7D	31 August 2019
8	31 August 2019
9	06 September 2025
10	06 September 2025
11	**05 September 2026**
12	**05 September 2026**
13	06 December 2025
14	06 December 2025
15	06 December 2025
16	06 December 2025
17	06 September 2025
18	06 September 2025
19	**05 September 2026**
20	**05 September 2026**
21	01 March 2025
22	01 March 2025
23	02 September 2023
24	02 September 2023
25	01 March 2025
25A	01 March 2025
25B	07 March 2026
25C	07 March 2026
25D	06 December 2025
26	06 December 2025
26A	01 June 2024
26B	01 June 2024
27	03 June 2017
28	03 June 2017
28A	01 June 2024
28B	01 June 2024
28C	01 June 2024
28D	01 June 2024
28E	02 March 2019
28F	02 March 2019
28G	02 March 2019
28H	02 March 2019
28I	07 March 2015
28J	07 March 2015
28K	29 February 2020
28L	29 February 2020
28M	01 June 2024
28N	01 June 2024
28O	07 March 2015
28P	07 March 2015
28Q	07 March 2015
28R	07 March 2015
28S	29 February 2020
28T	29 February 2020
28U	02 March 2019
28V	02 March 2019
28W	02 March 2019
28X	02 March 2019
28Y	02 March 2019
28Z	02 March 2019
28ZA	02 March 2019
28ZB	02 March 2019
28ZC	02 March 2019
28ZD	02 March 2019
28ZE	02 December 2023
28ZF	02 December 2023
28ZG	05 September 2015
28ZH	05 September 2015
29	03 June 2017
30	03 June 2017
31	01 March 2025
31A	01 March 2025
31B	06 December 2025
31C	06 December 2025
32	02 March 2024
32A	02 March 2024
32B	02 March 2024
32C	01 June 2024
32D	01 June 2024
32E	01 June 2024
32F	01 June 2024
32G	01 June 2024
32H	01 June 2024
32I	01 March 2025
32J	06 December 2025
32K	06 December 2025
32L	07 March 2026
32M	07 March 2026
32N	01 March 2025
33	31 August 2019
34	31 August 2019
35	05 June 2021
36	**05 September 2026**
36A	**05 September 2026**
36B	**05 September 2026**
36C	**05 September 2026**
36D	03 June 2023
37	06 June 2026
38	**05 September 2026**
39	**05 September 2026**
40	**05 September 2026**
41	**05 September 2026**
42	07 March 2026

43	07 March 2026
44	07 June 2025
45	07 June 2025
46	07 June 2025
47	06 June 2026
48	06 June 2026
49	07 March 2026
50	06 December 2025
50A	06 June 2026
51	06 June 2026
51A	01 June 2024
51B	01 June 2024
51C	**05 September 2026**
51D	**05 September 2026**
51E	06 December 2025
51F	06 December 2025
52	04 March 2017
52A	07 September 2024
52B	07 September 2024
53	04 June 2016
54	04 June 2016
55	04 June 2022
56	04 June 2022
57	04 June 2022
58	04 June 2022
59	04 June 2022
60	04 June 2022
61	04 June 2022
61A	04 June 2022
61B	04 June 2022
61C	04 June 2022
61D	04 June 2022
61E	04 June 2022
61F	04 June 2022
62	04 June 2022
63	05 March 2016
64	05 March 2016
65	02 December 2017
66	02 December 2017
67	03 December 2011
68	03 December 2011
69	04 June 2016
70	04 June 2016
71	03 June 2017
72	03 June 2017
73	06 June 2015
74	06 June 2015
75	04 June 2016
76	04 June 2016
77	06 June 2015
78	06 June 2015
79	07 June 2014
80	07 June 2014
81	06 June 2015
82	06 June 2015
83	06 June 2015
84	06 June 2015

85	02 December 2017
86	02 December 2017
87	06 June 2015
88	06 June 2015
89	02 December 2017
90	02 December 2017
91	06 June 2015
92	06 June 2015
93	06 December 2014
94	06 December 2014
95	02 June 2018
Page	Date Last Changed
96	02 June 2018
97	07 June 2014
98	07 June 2014
99	03 June 2017
100	03 June 2017
101	07 June 2014
102	07 June 2014
103	02 December 2017
104	02 December 2017
105	02 June 2018
106	02 June 2018
107	06 June 2015
108	06 June 2015
109	06 June 2015
110	06 June 2015
111	02 June 2012
112	02 June 2012

Routes and locations on which TCOD can be used	Remarks, including Locations/Sections where TCOD cannot be used, in addition to those detailed above and in the RULE BOOK
Hitchin Cambridge Jn. to Royston (Route Boundary)	Not to be used in the Axle Counter sections between Hitchin Cambridge Junction and Letchworth Garden City Station
LN125 HITCHIN, CAMBRIDGE JN TO ROYSTON (ROUTE BOUNDARY)	
Hitchin Cambridge Jn. to Royston (Route Boundary	Not to be used in the Axle Counter sections between Hitchin Cambridge Junction and Letchworth Garden City Station
LN135 KINGS DYKE TO CRESCENT JN	
Funthams Lane CCTV LC excl. to Crescent Jn	
LN145 MARHOLM JN TO GLINTON JN	
Marholm Jn to Glinton Jn	Not to be used on this line of route.
LN150 FLYOVER EAST JN TO DECOY NORTH JN	
Flyover East Jn. to Decoy North Jn	
LN155 FLYOVER EAST JN TO LOVERSALL JN (UP LOVERSALL CURVE)	
Flyover East Jn. to Loversall Jn	
LN160 LOVERSALL CARR JN TO FLYOVER WEST JN	
Loversall Carr Jn. to Flyover West Jn	
LN165 HARRINGAY PARK JN TO HARRINGAY JN	
Harringay Park Jn. to Harringay Jn	
LN170 WERRINGTON JN TO FLYOVER EAST JN VIA LINCOLN	
Beckingham SB to Flyover East Jn	Not to be used between mileages 109m 00ch to 110m 60ch due to Beech Hill LC
LN185 ALLINGTON WEST JN TO SKEGNESS	
Allington West Jn to Allington North Jn	
LN190 ALLINGTON EAST JN TO ALLINGTON NORTH JN	
Allington East Jn to Allington North Jn	
LN195 GRANTHAM, NOTTINGHAM BRANCH JN TO BOTTESFORD WEST JN	
Nottingham Branch Jn to Allington West Jn	
LN220 BESSACARR JN TO BLACK CARR JN	
Bessacarr Jn. to Black Carr Jn	
LN3140 BEDFORD ST JOHNS exclusive TO BEDFORD STATION JN.	
Bedford St Johns to Bedford	Up and Down Bletchley Goods Up and Down Bletchley Run Round Siding
LN3201 ST PANCRAS TO TAPTON JN (VIA DERBY)	
St Pancras to Kentish Town Jn.	Up & Down Relief line Up & Down slow line WH198 / WH200 to Buffer Stops Platform 1/2/3/4
Kentish Town Jn. to Luton South Junction.	West Hampstead Down Loop West Hampstead Run Round

Routes and locations on which TCOD can be used	Remarks, including Locations/Sections where TCOD cannot be used, in addition to those detailed above and in the RULE BOOK
	Up Hendon Line. Down Hendon line Up & Down Brent Curve. Up & Down Cricklewood Curve. Up Goods 1 & 2 Cricklewood. Depot Exit Road Cricklewood. All sidings Cricklewood Depot Except north reception 1 & 2. St Albans Centre Siding
Luton South Jn. to Bedford Station Jn.	Between WH 104 - WH 98 Up Fast Between WH299 - WH307 Down Slow Between WH312 - WH298 Up Slow Luton Platform Loop Platform one Leagrave.
Bedford Station Jn. to Sharnbrook Jn.	Between WH343 – WH349 Down Slow Between WH 362 – WH348 Up Slow Bay Platform Down Platform Loop Up and Down Bletchley Goods Up and Down Bletchley Run Round Siding If used in advance of WH157 WH357 then Kettering Workstation, EMCC should be informed.
	All lines between Oakley and Kettering station.
	Reception & Departure lines Wellingborough Up Sidings Up & Down Slow lines between Kettering South Jn. & Kettering Station North Jn. Wellingborough Station to Kettering Station
Kettering Station to Leicester South Jn. Down direction LR.209/211 & Up direction LR.212/214 Little Bowden Level Crossing Down direction LR.209/211 & Up direction LR.222/214 to clear of barrow crossing, Market Harborough station	Up & Down Slow from Kettering Station (Inc) to Kettering North Jn. Up & Down Goods Knighton Jn. to Wigston North Jn.
Leicester North Jn to Loughborough Down Fast LR.505, Up Fast LR.512, Down Slow LR.517 and Up Slow LR.518.	Up & Down Goods at Humberstone Road. Use prohibited on all lines within Leicester Station area between North & South Jn.
Breadsal Jn (exc) to signal DC4833 Down / signal to signal DC4833 Down / signal DY551 Up	Up Passenger Loop & Down Passenger Loop Broadholme. If used in advance of DY.564 then Chesterfield Work Station, Derby EMCC to be informed
LN3213 FARRINGDON TO KENTISH TOWN JUNCTION	
Kentish Town Jn. to Farringdon	From TWH1009 Up Moorgate approaching Dock Junction North to TWH1043 approaching Farringdon Station. From TWH1042 Down Moorgate at Farringdon Station to TWH1006 Dock Jn North. Emergency Point and Route Release and PoSA Area.
LN3214 CANAL TUNNELS JUNCTION TO BELLE ISLE JUNCTION	

Routes and locations on which TCOD can be used	Remarks, including Locations/Sections where TCOD cannot be used, in addition to those detailed above and in the RULE BOOK
Seamer South Jn signal SR139 to Seamer West Jn on Down Bridlington line. Seamer West Jn to signal SR140 on Up Bridlington line.	
LN916 HESSLE ROAD TO SALTEND	
Hessle Road to Springbank North Jn	
LN918 SPRINGBANK NORTH JN TO WALTON STREET JN	
Springbank North Jn to Walton Street Jn	
LN920 ANLABY ROAD JN TO WEST PARADE NORTH JN	
Anlaby Road Jn to West Parade North Jn	
LN922 WHITEHALL WEST JN TO HELLIFIELD SOUTH JN	
Whitehall West Jn to Gargrave	Not to be used between signal L3971 and Shipley West Jn. on Down line
LN924 APPERLEY JN TO ILKLEY	
Apperley Jn to Ilkley	
LN926 DOCKFIELD JN TO ESHOLT JN	
Dockfield Jn to Esholt Jn	
LN928 SHIPLEY EAST JN TO BRADFORD FORSTER SQUARE	
Shipley East Jn to Bradford Forster Square	Not to be used between signal L3966 and Shipley East Jn. on Up line
LN932 SHIPLEY SOUTH JN TO SHIPLEY WEST JN	
Shipley South Jn to Shipley West Jn	

London North Eastern Route GI - Dated: 08/08/2026

Rule Book Module T3 - Possession of the line for engineering work

Swing Bridges at Goole, Hull, Keadby and Selby

When the Navigation Authority requires the swing bridge to be opened to boats, the signaller must get permission from the PICOP if the swing bridge is within the PICOPs area of control or the ES if the swing bridge is within a worksite.

When there are engineering trains / OTMs / OTP in the possession, a red light must be placed in the four-foot at every protecting signal for the swing bridge and in the four-foot at the same location on any adjacent line. The PICOP must arrange for this to be done if any of these locations are within the PICOP's section of control, or the ES must arrange for this to be done if any of these locations are within their worksite.

The PICOP / ES must obtain permission from the signaller before authorising an engineering train / OTM / OTP movement past any red light towards the swing bridge.

London North Eastern Route GI - Dated: 07/06/2025

Rule Book Module T10 – Duties of a designated person (DP) and people working on rail vehicles

Safety of employees working on rail vehicles

At the following locations sidings are used for maintenance and repairs or form part of depots as shown in Rule Book, Module T10, Section 1. When sidings are in used by Maintenance personnel the movements of rail vehicles will be under the control of the Designated Person, Responsible for Protection (DP) who will be identified by an orange arm-band endorsed 'DP' in black letters. At other times movements will be under the control of operating staff. Movements must not exceed 5 mph.

When Maintenance personnel are in the sidings visitors and staff of other departments/ Companies must report to the designated person and must not start work until their presence in the depot or sidings has been recorded and the relevant protection has been provided.

Location	Line(s)
Bedford Carriage Sidings	All roads
Corby Internal Exchange BSC	Cripple Siding
Derby Etches Park Depot	Depot Roads 4 to 8
Derby Etches Park 4 Shed Fuelling Point	Both Shed Roads
Derby Railway Technical Centre	Engineering Development Unit roads 1 to 6. Research Workshops Roads 7, 8, 12, 13,14, 17. Track Laboratory Road 19
Leicester Humberstone Road	Cripple Sidings 12 and 13
Toton C & W Depot	Depot Roads 1 to 4 Sidings 5 and 6
Toton EWS TMD	Depot Roads 1 to 4 Depot Roads 5 to 15 (North) Wheel Lathe Road

London North Eastern Route GI - Dated: 27/12/18

LUCAS TRACK CIRCUITS

The above type of track circuit is liable to produce a wrong side failure when occupied by a vehicle fitted with a track circuit actuator. Vehicles fitted with operative Track Circuit Actuators (this includes ALL Class 14X, 15X, 16X, 170 and 22X units) must NOT run over the following lines:-

Great Coates No.1 to Immingham East Jn

Ferrybridge Power Station lines

London North Eastern Route GI - Dated: 27/12/18

Modified Working Arrangements on Single lines Rule Book Module P2 Section 7

Introduction

Prior to the introduction of Working by Pilotman, Modified Working may be authorised by the Network Rail Route Control Manager (East Midlands) Responsible Person (LNE), for a period of up to two hours, or until a Pilotman arrives.

In exceptional circumstances the period of up to two hours may be extended subject to the agreement of the Network Rail Route Control Manager (East Midlands) Responsible Person (LNE), the Responsible Person and the Train/Freight Operating companies involved.

In the event of signalling equipment failure on the single lines listed in the table and a Pilotman is not readily available, modified working may be introduced providing:

The Signaller is able to work the points giving access to/egress from the single line or they can be set and detected for the passage of trains.

Direct verbal communication is available between all Signallers involved and the Responsible Person.

Method of working

In the event of a failure of signalling equipment the Network Rail Route Control Manager will decide whether a Pilotman is available or, if not, consider authorising Modified Working.

If Modified Working is authorised, a Responsible Person will be appointed who will ascertain that the single line concerned is clear and that the last train passed clear complete with tail lamp. When this has been done, the Responsible Person will give permission for the Signaller to issue/dictate a Modified Working ticket RT3177 to authorise the passage of the next train. This procedure will be repeated by the Responsible Person for each train which passes over the single line under Modified Working arrangements.

During Modified Working

Once the Signaller has been given authority by the Responsible Person and the arrangements have been confirmed with any other Signaller involved, and the line is clear in accordance with the train signalling regulations the signaller may then issue/dictate the RT3177 ticket to the Driver and advise them of any additional information.

When the Driver has read back all the information on the RT3177 ticket along with any additional information and the Signaller is satisfied that a clear understanding has been reached, the Signaller may authorise the Driver to pass the protecting signal at Danger and proceed cautiously.

Once a train has been admitted to the single line under Modified Working arrangements, the Signaller(s) concerned must not authorise any subsequent train (except to assist a failed train) to pass the protecting signals for the single line until it has been confirmed that the train has passed clear of the single line complete with tail lamp.

Once the train has passed clear of the single line, the Driver must, if previously instructed to do so, stop at the location identified on the RT3177 and contact the Signaller controlling the exit from the single line. The Driver must confirm if the train is complete with tail lamp.

In the event of a failed train, obstruction or any other exceptional circumstance, a clear understanding must be reached between the Responsible Person, all Signallers and Drivers involved before any further movement is authorised.

Lines Where Modified Working is authorised

Route	Line name	Between these locations	Remarks
LN175	Up and Down Sleaford South East	Sleaford South Jn and Sleaford East Jn	-
LN180	Up & Down Sleaford North West	Sleaford West Jn and Sleaford North Jn	-
LN185	Up & Down Main	Sleaford East Jn and Heckinqlon	-
LN185	Up & Down Main	Hubberts Bridge and Boston West St	-
LN185	Up & Down Main	Boston and Sibsey	-
LN215	Up & Down Pyewipe	Boultham Jn and Pyewipe Jn	-
LN634	Single	Middlesbrough to Nunthorpe	
LN634	Single	Nunthorpe-Battersby	
LN634	Single	Battersby-Glaisdale	
LN634	Single	Glaisdale - Whitby	
LN642	Branch (Goods)	Saltburn to Crag Hall	
LN678	Single	Shildon to Bishop Auckland	
LN678	Up Down Bishop Auckland	Darlington to Heighington	
LN694	Up and Down Blyth & Tyne	Morpeth Jcn & Coatsworth Jcn	One train only
LN736	Up Main Down	Kirton to Northorpe	
LN736	Up Main Down	Northorpe to Gainsborough Central	
LN736	Cleethorpes Single	Cleethorpes and Grimsby Town	-
LN736	Cleethorpes Single	Brigg and Wrawby Junction	
LN758	Down / Up South Yorkshire	Dinnington to Maltby	
LN758	Down / Up South Yorkshire	Maltby to St Catherines Jn	
LN807	Up and Down Dore Curve	Dore South Jn. To Dore West Jn.	Modified Working may only be introduced between these locations provided Modified working is not already in operation between Dore Station Jn. To Dore West Jn.
LN808	Up and Down Manchester	Dore Station Jn. To Dore West Jn.	Modified Working may only be introduced between these locations provided Modified working is not already in operation between Dore South Jn and Dore West Jn
LN838	Up / Down Harrogate	Hammerton - Poppleton	
LN838	Down & Up Main	Knaresborough - Cattal	
LN850	Up & Down Westgate Curve	Wakefield Westgate - Kirkgate	
LN862	Up and Down Huddersfield	Barnsley Summer Lane Jn. To Penistone Station.	Modified Working may only be introduced between these locations provided Modified working is not already in operation between Penistone Station and Stockmoor Station.
LN862	Up and Down Huddersfield	Penistone Station to Clayton West Jn	Modified Working may only be introduced between these locations provided Modified working is not already in operation between Barnsley Summer Lane Jn. To Penistone Station, or Stocksmoor Station and Springwood Jn.

LN862	Penistone Single	Stocksmore Station and Springwood Jn.	Modified Working may only be introduced between these locations provided Modified working is not already in operation between Penistone Station to Clayton West Jn
LN882	Up / Down Goole	Goole - Ferrybridge	
LN892	Up Monkhill Down	Ferrybridge North to Pontefract East	
LN894	Up Knottingley Goods Down	Knottingley South to Knottingley East	
LN914	Down/Up Bridlington	Seamer - Filey	
LN914	Down/Up Bridlington	Hunmanby - Bridlington	
LN924	Up Apperley Down	Apperley Junction to Springs Junction	If more than 2 hours has elapsed since Modified Working was introduced no further authorities are to be granted for trains to pass over the single line under this procedure and pilot working must be introduced. Modified Working procedure can only be used once per incident. The signaller on Leeds North west must record the train movements on to & off the single line in the Occurrence book or TRB If Modified working is introduced on the Up & Down Apperley line then it must NOT be introduced on the Up & Down Basildon If Modified working is introduced on the Up & Down Basildon line then it must NOT be introduced on the Up & Down Apperley line
LN3246	Matlock Single	Ambergate Jnc to Matlock	This method of working will not be introduced if a train has been (or requires to be) shut in at the Ground Frame at Matlock
LN3340	Litchfield Single	Alrewas SB to Wichnor Jnc	
LN3525	Up and Down	Knighton Jn to Bagworth	One train only

London North Eastern Territory GI - Dated: 23/05/2026

Manual Power Changeover Sites (MPCO) for Bi Mode trains

As part of the introduction of the Intercity Express Train (IET) lineside signage has been installed at publicised strategic locations across LNE, Anglia, LNW & Scotland. This signage is a prompt to the driver to raise the pantograph and change traction mode from Diesel to Electric dynamically at up to permissible line speed at that location. Some sites have been designed to deal with power deficiencies to support the increased electric trains operating within the current timetable and may be applicable only at certain times for certain trains.

The following signs have been provided at the MPCO zone consisting of three signs. These signs are only applicable to Bi-mode Class 800 and 802 trains operating in DIESEL mode. Any arrangements for coasting and associated Pantograph raising are to be treated separately from these instructions and signs.

Drivers must adhere to their own specific companies operating instructions for specifics about length of requirement to stay in diesel mode.

Manual Power Changeover Signage – Diesel to Electric Mode (D>E)	
Sign	Action
	Advance Traction Changeover Sign As the train passes the 'advance traction changeover' sign the driver must prepare to carry out a dynamic manual changeover (D>E) – this must NOT be done before the front of the train reaches the 'raise pantograph' sign.
	Raise Pantograph Sign The driver must wait until the front of the train has reached this sign before initiating a dynamic manual changeover (D>E).
	Do NOT Raise Pantograph Sign If the pantograph(s) has not been raised by the time the front of the train reaches this sign, there must be no attempt made to raise the pantograph/select Electric Mode when speed is in excess of 20mph. The train must continue in Diesel Mode until the train is subsequently stopped or its speed reduced to 20mph or less.

London North Eastern Route GI - Dated: 14/03/2020

OPERATIONAL STATION PLATFORM LENGTHS IN METRES

NOTE – For lengths of East Midlands Platforms, see relevant Table 'A' in Module LN4

STATION	DOWN	UP	SINGLE	MULTI-PLATFORM
ACKLINGTON	114	114	-	-
ADWICK	104	104	-	-
ALEXANDRA PALACE				
Platform 1(Up Slow No. 2)	-	169.4	-	-
Platform 2 (Up Slow No.1)	-	167.7	-	-
Platform 3 (Down Slow)	170.2	-	-	-
Platform 4 (Down Hertford)	169.9	-	-	-
ALLENS WEST	122	97	-	-
ALNMOUTH	233	233	-	-
ALTHORPE	102	102	-	--
ANCASTER	87	88	-	-
APPERLEY BRIDGE	143	120	-	-
ARLESEY	244.7	244.7	-	-
ARRAM	79.5	81.5	-	-
ASHWELL & MORDEN	168.4	167.8	-	-
ASHINGTON				BAY 104
BAILDON	-	-	102	-
BALDOCK	168.8	168.2	-	-
BARDON MILL	95	91	-	-
BARNETBY				
Platform 1 (Up Cleethorpes Slow)	-	116.5	-	-
Platform 2 (Up Cleethorpes Fast)	-	103.5	-	-
Platform 3 (Down Cleethorpes Fast)	103	-	-	-
Platform 4 (Down Cleethorpes Slow)	116	-	-	-
BARNSLEY	163	102	-	-
BARROW HAVEN	-	-	60.5 Up 46 Down	-
BARTON-ON-HUMBER	-	-	55	-
BATLEY	150	150	-	-
BATTERSBY	-	-	155.6	-
BAYFORD	123.6	122.5	-	-
BEDLINGTON	100	96		
BEMPTON	-	-	93.8 Up 117.8 Dn	-
BEN RHYDDING	99	99	-	-
BENTLEY (STH YORKS)	104	104	-	-
BERRY BROW	-	-	65	-
BERWICK-UPON-TWEED	233	234	-	-
BEVERLEY	101	93	-	-
BIGGLESWADE				
Platform 4 (Down Slow)	247	-	-	-
Platform 3 (Down Fast)	246.7	-	-	-
Platform 2 (Up Fast)	-	246.3	-	-
Platform 1 (Up Slow)	-	244.4	-	-
BILLINGHAM	146	146	-	-
BINGLEY	111.5	111.5	-	-
BISHOP AUCKLAND	-	-	80	-
BLAYDON	97	97	-	-
BOLTON-ON-DEARNE	96	96	-	-
BOSTON	174	175	-	-
BOWES PARK	138	138	-	-

STATION	DOWN	UP	SINGLE	MULTI-PLATFORM
BRADFORD FORSTER SQUARE	-	-	-	Platform 1 273 Platform 2 266 Platform 3 101

STATION	DOWN	UP	SINGLE	MULTI-PLATFORM
BRADFORD INTERCHANGE	-	-	-	Platform 1 209 Platform 2 203 Platform 3 127 Platform 4 128
BRAMLEY	102	102	-	-
BRAMPTON (CUMBRIA)	106.6	107	-	-
BRIDLINGTON Platform 4 Platform 5 Platform 6 Platform 7	 168.2 - - -	 - 168.2 - -	 - - - -	 - - 138 214 (out of use)
BRIGG	140	154	-	-
BRIGHOUSE	118	118	-	-
BRITISH STEEL REDCAR	60	60	-	-
BROCKHOLES	-	-	65	-
BROCKLEY WHINS	64.8	65	-	-
BROOKMANS PARK Platform 4 (Down Slow) Platform 3 (Down Fast) Platform 2 (Up Fast) Platform 1 (Up Slow)	 123.5 123.5 - -	 - - 123.5 123.5	 - - - -	- - - -
BROOMFLEET	95	95	-	-
BROUGH	184	184	-	Up Bay 142
BURLEY-IN-WHARFEDALE	98	98	-	-
BURLEY PARK	97	97	-	-
BLYTH BEBSIDE	100	100		
CASTLEFORD	104	OOU	-	(Platform 2 = Out of use)
CASTLETON MOOR	-	-	77.4	-
CATTAL	86	86	-	-
CHAPELTOWN	85	85	-	-
CHATHILL	83	164	-	-
CHESTER-LE-STREET	104.5	104.5	-	-
CHESTERFIELD Platform 1 (Down Main) Platform 2 (Up Main) Platform 3 (Down Barrow Hill)	– 211 – 240	– – 205 –	– – – –	– – – –
CHURCH FENTON Platform 1 (Up Normanton) Platform 2 (Down Normanton) Platform 3 (Up/Down Pass. Loop) Platform 3 (Up/Down Pass.Loop) Platform 4 (Down Leeds)	 - 132 - - 119	 101.5 - - - -	 - - - - -	 - - 121 (Up direction to Drivers viewing point of CF720 signal) 132 (Down direction)
CLEETHORPES		-	-	Except DMU's / DMU's Platform 1 202.6 / 170 Platform 2 205.6 / 174 Platform 3 205.6 / 174 Platform 4 203.0 / 203
COLLINGHAM	89	66	-	-
COMMONDALE	-	-	51	-
CONISBROUGH	117	97	-	-
CONONLEY	116.5	95.6	-	-
CORBRIDGE	97	97	-	-
COTTINGHAM	105	105	-	-
COTTINGLEY	117	117	-	-
CRAMLINGTON	101	101	-	-
CRESWELL	79	79	-	-
CREWS HILL	126	126.2	-	-
CROSSFLATTS	102	102	-	-

STATION	DOWN	UP	SINGLE	MULTI-PLATFORM
CROSS GATES	151	148	-	-
CROWLE	90	89	-	-
CUFFLEY	126.2	126.5	-	-
DANBY	-	-	90	-
DARLINGTON	-	-	-	Platform 1 Up direction throughout. 441 Platform 1 Down direction to T887 signal. 347 Platform 2 Bay. 181 Platform 3 Bay. 200 Platform 4A Down direction to T895 signal. 134 Platform 4B Down direction clear of1080B points. 251 Platform 4 Down/Up direction throughout. 458 Platform 4 Up direction to T888 signal. 238
DARLINGTON PLATFORM 5		270		
DARLINGTON PLATFORM 6			151.9	
DARNALL	108.7	108.7	-	-
DARTON	104	104	-	-
DEIGHTON	97	97	-	-
DENBY DALE	-	-	65	-
DEWSBURY	150	155	-	-
DINSDALE	97	97	-	-
DODWORTH	-	-	95	-
DONCASTER	-	-		Platform 0 Bay: 107 Platform 1 Up direction – 319 Platform 1 Down direction – 330 Platform 2 Bay – 126 Platform 3 Up direction (Full length) – 418 Platform 3 Down direction (Full Length) – 425 Platform 3 North end only (3B – either direction) – 165 Platform 4 Down direction – 296 Platform 4 Up direction – 257 Platform 5 Bay – 57 Platform 6 Bay – 107 Platform 7 Bay – 105 Platform 8 Down direction – 296 Platform 8 Up direction -254
DORE	152	152		-
DRAYTON PARK	124.1	124.1	-	-
DRIFFIELD	124	103.8	-	-
DRONFIELD	111.8	112.5	-	-
DUNSTON	94	93	-	-
DURHAM	295	264	-	-
EAGLESCLIFFE	175	175	-	-
EAST BOLDON	62.9	66.3	-	-
EAST GARFORTH	102	102	-	-
EASTRINGTON	90	90	-	-
EGTON	-	-	80	-
ELSECAR	130	99	-	-
ENFIELD CHASE	126.2	125.4	-	-
ESSEX ROAD	128.7	128.5	-	-
FEATHERSTONE	101	101	-	-
FELLGATE	66	66	-	-
FERRIBY	110	170	-	-

LN600	Shaftholme Jn – Reston GSP	77.340yds – 77.1231yds	Up Main Down Main Tyne Yard Reverse
LN804	Tapton Jn to Gascoigne Wood (via Sheffield)	162m 158yds to 162m 704yds	Masborough Jn Up Main Dn Main
LN804	Tapton Jn to Masborough Jn	163m 440yds to 163m 1234yds	Holmes Jn Up Main Dn Main
LN804	Tapton Jn to Gascoigne Wood (via Sheffield)	164m 880yds to 165m 00yds	Aldwarke Junction
LN806	Tapton Jn to Masborough Jn	162m 158yds to 162m 528yds	Masborough Jn Up Barrow Hill Dn Barrow Hill
LN814	Tinsley North Junction to Sheffield Tram Transfer Line	0m 0000yds to 0m 60yds	Tinsley East Jn Area Up Tinsley Down Tinsley Down/Up Tinsley Sheffield Tram Transfer Line
LN815	Parkgate Jn to Sheffield Tram Parkgate Transfer Line	0m 000yds to 0m 328yds	Parkgate Jn Area Up Tinsley Down Tinsley Parkgate Tram Transfer Line
LN818	Holmes Curve	0m 1135yds to 0m 1364yds	Rotherham Central Jn Area Up Tinsley Down Tinsley Holmes Curve
LN818	Tapton Jn to Masborough Jn	0m 0yds to 0m 101yds	Holmes Jn Holmes Curve
LN826	Doncaster South Yorkshire to Swinton Jn North / South	18m 286yds to 18m 1518yds	Conisbrough Stn to Conisbrough Tunnel Up Conisbrough Down Conisbrough Up Conisbrough Goods Loop
LN828	Mexborough Jn to Aldwarke Jn via Kilnhurst	7m 608yds to 7m 572yds	Aldwarke Junction
LN830	Aldwarke Jn to Woodburn Jn	7m 80yds to 7m 550yds	Aldwarke Junction
LN830	Aldwarke Jn to Woodburn Jn	7m 80yds to 7m 550yds	Aldwarke Junction
LN830	Aldwarke Jn to Woodburn Jn	6m 616yds to 6m 1320yds	Aldwarke new site area Up Tinsley Down Tinsley New Site signal
LN830	Aldwarke Jn to Woodburn Jn	5m 1244yds to 5m 1533yds	Parkgate Jn area Up Tinsley Down Tinsley Parkgate Tram Transfer Line
LN830	Aldwarke Jn to Woodburn Jn	4m 673yds to 4m 1187yds	Rotherham Central Jn Area Up Tinsley Down Tinsley Holmes Curve

LN830	Aldwarke Jn to Woodburn Jn	2m 1282 yds to 3m 370yds	Tinsley East Jn Area Up Tinsley Down Tinsley Down/Up Tinsley Sheffield Tram Transfer Line
LN836	Doncaster Marshgate Jn to Neville Hill East Jn	175m 1115yds to 175m 1340yds	Wakefield Westgate Up Doncaster Down Doncaster Down Westgate Platform Loop
LN854	Hall Royd Jn. to Colton Jn.	30m 1540yds to 31m 343yds	Greetland Junction Up Lancashire & Yorkshire Down Lancashire & Yorkshire
		23m 1166yds to 23m 1628yds	Hebden Bridge Up Lancashire & Yorkshire Down Lancashire & Yorkshire
LN859	Greetland Jn. To Dryclough Jn.	0m 1627y to 1m 242y	Greetland Junction Up Greetland Down Greetland
LN868	Wincobank Jn to Horbury Jn	16m 1144yds to 164m 1144yds	Ecclesfield West Area Up Barnsley Down Barnsley
LN898	Neville Hill East Jn to Hull	10m 880yds to 11m 440yds	Micklefield & Peckfield Jn Up Hull Down Hull Up Leeds Down Leeds
LN902	Micklefield Jn to Church Fenton North Jn	15m 1085yds to 15m 1335yds	Micklefield & Peckfield Jn Up Hull Down Hull Up Leeds Down Leeds
LN3201	St Pancras to Tapton Jn (via Derby)	From 95m 1474yds to 96m 242yds	Wigston North Jn. Up main, Down Main, Up&Dn Slow and Up&Dn Goods
LN3232	Wigston North Jn to Hinkley	From 15m 418yds to 15m 682yds	Wigston North Jn Up Nuneaton and Down Nuneaton

London North Eastern Route GI - Dated: 04/07/2026

LIST OF MODULE PAGES AND DATES

Page	Date Last Changed
1	**05 September 2026**
2	**05 September 2026**
3	01 June 2013
4	01 June 2013
5	06 June 2015
6	06 June 2015
7	06 December 2025
8	06 December 2025
9	03 December 2016
10	03 December 2016
11	01 June 2024
12	01 June 2024
13	03 December 2022
14	03 December 2022
15	07 December 2024
16	07 December 2024
17	01 June 2024
18	01 June 2024
19	**05 September 2026**
20	**05 September 2026**
21	06 September 2025
22	06 September 2025
23	**05 September 2026**
24	**05 September 2026**
25	02 December 2023
26	02 December 2023
27	01 June 2024
28	01 June 2024
29	**05 September 2026**
30	**05 September 2026**
31	07 June 2025
32	07 June 2025
33	07 June 2025
34	07 June 2025
35	29 February 2020
36	29 February 2020
37	29 February 2020
38	29 February 2020
39	06 June 2026
40	06 June 2026
41	06 September 2025
42	06 September 2025
43	07 December 2024
44	07 December 2024
45	01 June 2024
46	01 June 2024
46A	01 June 2024
46B	01 June 2024
47	07 March 2026
48	07 March 2026
49	01 June 2024
50	01 June 2024
51	03 December 2016

Page	Date Last Changed
52	03 December 2016
53	07 December 2024
53A	07 December 2024
53B	01 June 2024
54	01 June 2024
55	02 December 2023
55A	02 December 2023
55B	07 December 2024
56	07 December 2024
57	03 June 2017
58	03 June 2017
59	05 June 2021
60	05 June 2021
61	02 December 2023
62	02 December 2023
63	07 June 2025
64	07 June 2025
65	03 December 2022
66	03 December 2022
67	02 June 2018
68	02 June 2018
69	05 June 2021
70	05 June 2021
71	01 June 2024
72	01 June 2024
73	06 September 2025
74	06 September 2025
75	04 June 2016
76	04 June 2016
77	01 June 2024
78	01 June 2024
79	02 June 2018
80	02 June 2018
81	02 December 2023
82	02 December 2023
83	04 June 2016
84	04 June 2016
85	04 June 2016
86	04 June 2016
87	01 June 2024
88	01 June 2024
89	01 December 2018
90	01 December 2018
91	01 December 2018
92	01 December 2018
93	01 December 2018
94	01 December 2018
95	06 June 2026
96	06 June 2026
97	01 March 2025
98	01 March 2025
99	07 June 2025
100	07 June 2025

Page	Date Last Changed
101	03 December 2016
102	03 December 2016
103	03 December 2016
104	03 December 2016
105	29 February 2020
106	29 February 2020
107	05 June 2021
108	05 June 2021
109	05 June 2021
109A	05 June 2021
109B	05 June 2021
110	05 June 2021
111	28 November 2020
112	28 November 2020
113	04 September 2021

Page	Date Last Changed
114	04 September 2021
115	07 September 2024
116	07 September 2024
117	05 June 2021
118	05 June 2021
118A	05 June 2021
118B	05 June 2021
119	04 June 2022
120	04 June 2022
121	07 September 2024
122	07 September 2024
123	07 September 2024
124	07 September 2024
125	29 August 2020
126	29 August_2020

LOR	Seq.	Line of Route Description	ELR	Route	Last Updated
LN101	009	Kings Cross to Shaftholme Jn	ECM1	London North Eastern	08/08/2026

Location	Mileage M Ch	Running lines & speed restrictions	Signalling & Remarks
WELWYN NORTH	22 00		TCB: Axle Counters York ROC (K) RA9 Langley workstation AC:York ECR GSM-R
	22 08 *		Note - Between 21m 01ch on the Down Slow and 22m 38ch on the Down Main signal spacing is insufficient for classes of train operating with braking performance in accordance to requirements in GKRT0075 Appendix B and GM/RT2045 Curves V or A1
Welwyn South Tunnel (408m 446yds)	22 11 to 22 31		⊠ = Lockout protection Provided - see General instruction for detail (Numbers prefixed YB.)
Welwyn North Tunnel (956m 1046yds)	22 44 to 23 12		
	23 15 *		Note - Between 26m 58ch and 24m 07ch on th Up slow line signal spacing is insufficient for classes of train operating with braking performance in accordance to requiremnts in GKRT0075 Appendix B and GM/RT2045 curves V or A1
Woolmer Green Crossover	23 58		
Woolmer Green	23 68		
	23 72 *		
KNEBWORTH	25 03		
Langley Jn FS OHNS	25 73	To/From Hertford North see LN120 seq 004	UH = Up Hertford DH = Down Hertford
			CW. Up Slow at 26m 30ch.
Langley Jn Up	26 45		
Langley Jn Down	26 59		① To / from Langley Stone Terminal (Lafarge private siding)
Langley Siding	26 59		
Stevenage HABD	26 62		Hot Axle Bearing Detectors on the Down Fast and Down Slow lines.
	27 38 *		
STEVENAGE	27 45		PP-C Permissive working is authorised in Stevenage Down Slow Platform 4 for Class 1, 2, 3 ECS, 5, 9 & 0 trains.
	27 56 *		

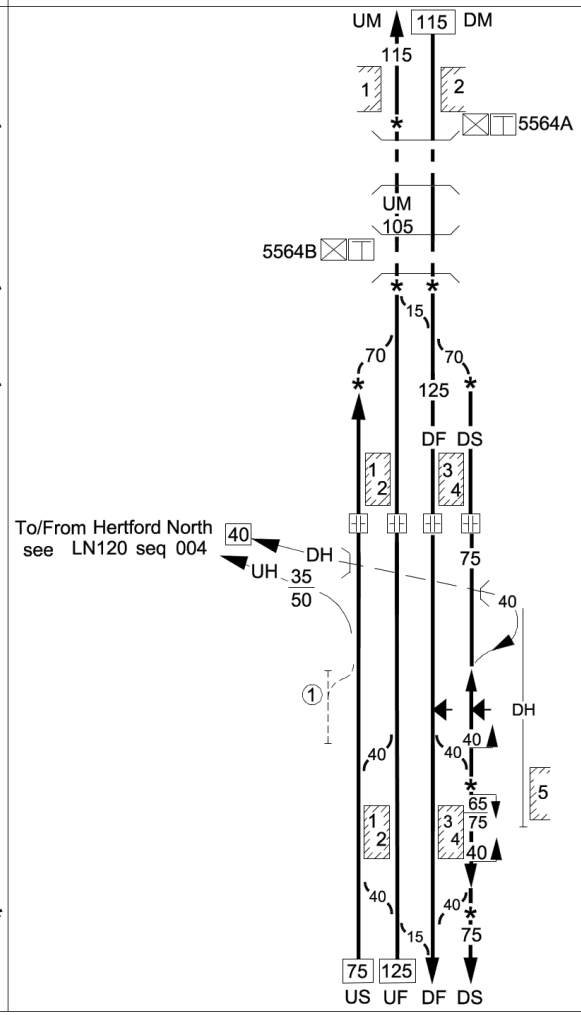

LOR	Seq.	Line of Route Description	ELR	Route	Last Updated
LN101	010	Kings Cross to Shaftholme Jn	ECM1	London North Eastern	14/09/2024

Location	Mileage M Ch	Running lines & speed restrictions	Signalling & Remarks
	29 05 *	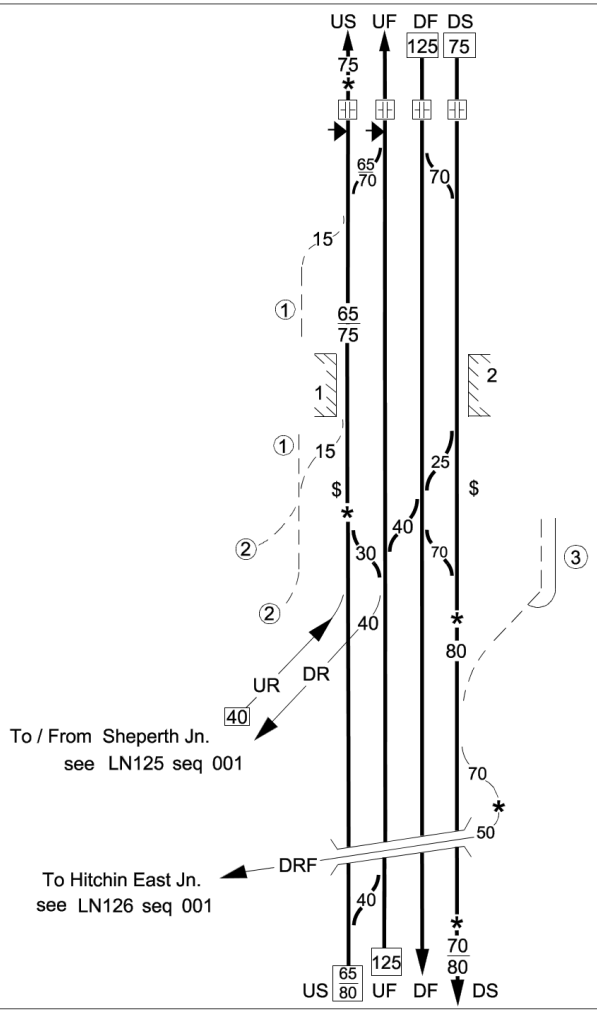	GSM-R TCB: Axle Counters York ROC (K) RA9 Hitchin workstation AC:York ECR
Corey's Mill OHNS (All Lines)	29 77		Wymondley Hot Axle Bearing Detectors on the UP Fast and Up Slow lines.
Wymondley HABD	30 60		
Wymondley WILD	30 63		
Hitchin South Jn	31 18ch		① = To / From Hitchin Up Sidings ② = To / From Hitchin Up Yard. ③ = To / From Hitchin Down Yard.
DS & DF LOS	31 62		Note: Operational length for Hitchin Down Yard sidings are 155m and 153m respectively
HITCHIN	31 74		
	31 79		
	32 03 $		$ = Class 373/2 trains must not exceed 20mph on the Up Slow and 50mph on the Down Slow passing over Underbridge 102 located at 32m 03ch
	32 06 *		
Cambridge Jn	32 11		
	32 18 *		UR = Up Royston. DR = Down Royston. DRF = Down Royston Flyover.
	32 32		
Hitchin North Junction	32 53		
	32 65 *		
Cadwell	33 42		Note - Between 38m 14ch and 31m 65ch on the Up Slow signal spacing is insufficient for classes of train operating with braking performance in accordance to requirements in GKRT0075 Appendix B and GM/RT2045 Curves V or A1
	34 33ch		

LOR	Seq.	Line of Route Description	ELR	Route	Last Updated
LN101	013	Kings Cross to Shaftholme Jn	ECM1	London North Eastern	23/05/2026

Location	Mileage M	Ch		Running lines & speed restrictions	Signalling & Remarks
Huntingdon South Jn	58	35			TCB York ROC Huntingdon WS RA9 AC:York ECR GSM-R
HUNTINGDON	58	70			PP-C Permissive working is authorised in Huntingdon Bay Platform 1 for Class 1, 2, 3 ECS, 5, 9 & 0 trains.
	59	12	*		Class 373/2 trains must not exceed 110 mph on the Down Fast line between 59m 10ch and 59m 30ch.
Huntingdon North Jn	59	20			CW. Down Slow at 59m 27ch
Abbots Ripton Public Bridleway LC	62	60		T	
Abbots Ripton HABD	62	61			Hot Axle Bearing Detector at Woodwalton on the UM
Woodwalton Jn	65	43			
	65	48	*		
	66	60	*		① = To / from Hundigdon Down Sidings. ② = To / from Connington Sidings (OOU)
Connington South Jn	67	30			
Connington North LC (CCTV)	68	28			
Holme TSC OHNS	69	00			
	69	00	*		
Holme Junction	69	11			
Holme LC (CCTV)	69	26			
Holme HABD	69	28			Hot Axle Bearing Detector at Holme on the DM
	69	30	*		
Holme Lode LC (CCTV)	70	02			York ROC Peterborough Workstation
Stilton Fen	70	78			Crossovers worked from Stilton Fen GSP
	71	00	*		
Holme LC (CCTV)	69	26			

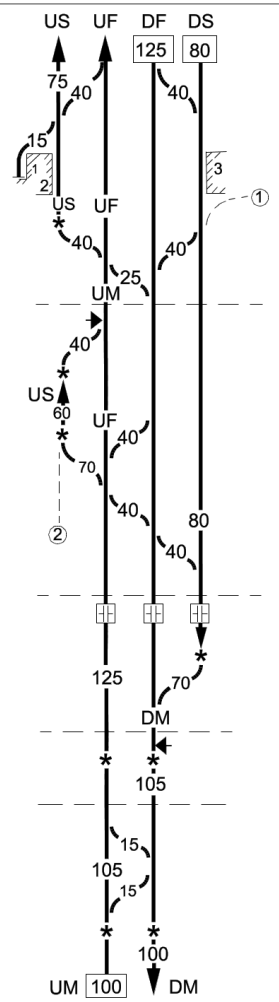

LOR	Seq.	Line of Route Description	ELR	Route	Last Updated
LN101	014	Kings Cross to Shaftholme Jn	ECM1 FOM EMP	London North Eastern	28/08/2023

Location	Mileage M Ch	Running lines & speed restrictions	Signalling & Remarks
Alternative Mileage			GSM-R TCB York ROC Peterborough WS RA9 AC:York ECR
	72 00 *		
Fletton Jn	74 69		① See Special Instructions
Boundary	75 00		
Fletton Jn (GF)	75 02		Change of ELR from Fletton Jn to 75m 02ch to 75m 00ch on the Orton Mere Line = FOM
	75 11		
	75 24 *		OML = Orton Mere Line MI = March Independent UH = Up March DH = Down March PTWG = Peterborough Two Way Goods U1 = Up Slow No1 U2 = Up Slow No2
	75 29 *		
	75 54 *		② = To/From Nene Carriage Sidings
	76 05		A = Alternative Mileage March Lines ELR = EMP
A 100 51 *	76 09 *		
	76 16 *		
Crescent Jn	76 25		

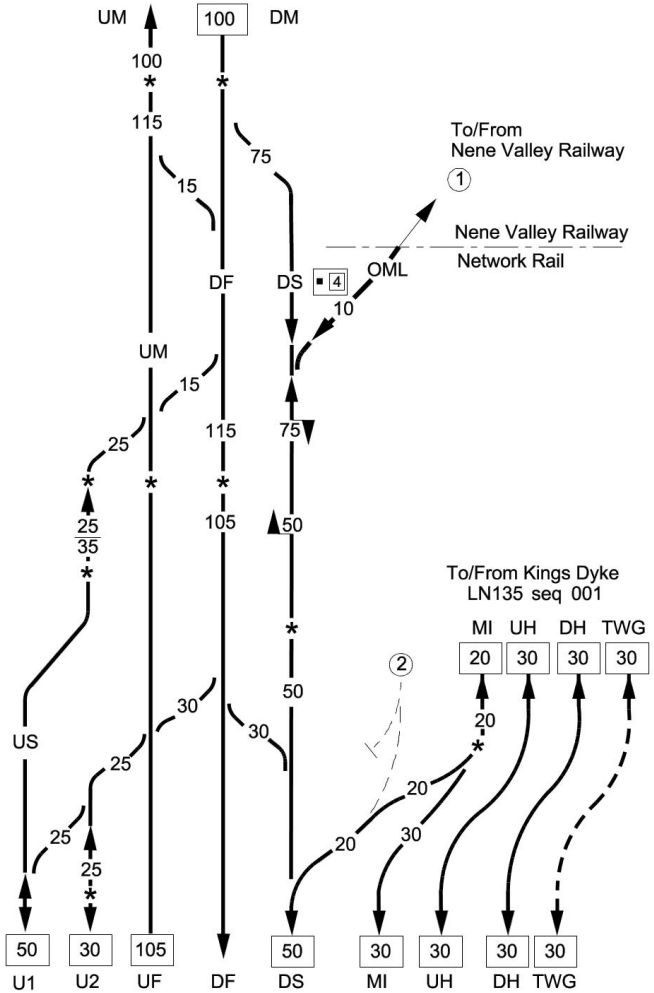

LOR	Seq.	Line of Route Description	ELR	Route	Last Updated
LN101	019	Kings Cross to Shaftholme Jn	ECM1	London North Eastern	06/04/2024

Location	Mileage M Ch	Running lines & speed restrictions	Signalling & Remarks
		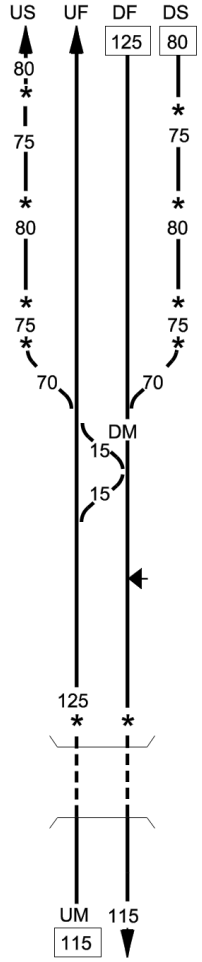	GSM-R TCB York ROC Peterborough WS RA9 AC:York ECR
	96 20 *		
	96 40 *		
	97 00 *		
	99 10 *		
	99 48 *		
Stoke	99 60		
Stoke GSP	99 66		Crossovers worked from Stoke GSP Doncaster SB (D)
Stoke HABD	99 78		Hot Axle Box Detector on the Down Main line at 99 78
			See General Instructions for SATWS details at Stoke Jn.
	100 39 *		
Stoke Tunnel (805m 880 yards)	100 39 to 100 79		TOWS Stoke Tunnel

LOR	Seq.	Line of Route Description	ELR	Route	Last Updated
LN101	020	Kings Cross to Shaftholme Jn	ECM1	London North Eastern	08/08/2026

Location	Mileage M Ch	Running lines & speed restrictions	Signalling & Remarks
			GSM-R TCB Doncaster SB (D) RA9 AC:York ECR
Highdyke	101 46		
	104 77 *		TOWS Saltersford DM, UF, US 103 40 to 104 40.
Grantham South Jn	105 01		DS = Down / Up Slow DG = Down / Up Goods ① To/From Grantham Down sidings (OOU) ② Grantham Up sidings
	105 27 *		TOWS D&UM 105 20 and 106 40.
GRANTHAM	105 38		Full permissive working (PP) is authorised at Grantham platform 3 for class 0, 1, 2, 3, 5 and 9 Contingency permissive working (PP-C) is authorised at Grantham platform 4 for class 1, 2, 3, 5 and 9 duringoperational disruptions only
Nottingham Branch Jn	105 75 * 106 08		Class 373/2 trains must not exceed 110 mph on the Down Main/Fast line between Grantham 105m 77ch & Shaftholme Jn 160m 00ch (No Lineside signs).
Grantham North Jn	106 34		

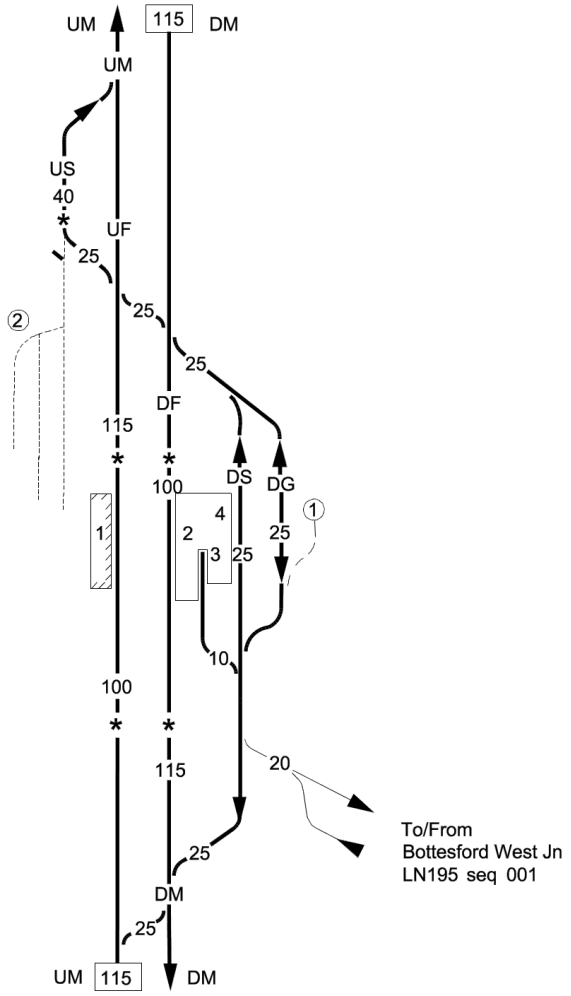

LIST OF MODULE PAGES AND DATES

Page	Date Last Changed
1	**05 September 2026**
2	**05 September 2026**
3	06 December 2006
4	06 December 2006
5	06 December 2006
6	06 December 2006
7	06 December 2025
8	06 December 2025
9	07 June 2025
10	07 June 2025
11	01 March 2025
12	01 March 2025
13	06 June 2026
14	06 June 2026
15	**05 September 2026**
16	**05 September 2026**
17	**05 September 2026**
18	**05 September 2026**
19	06 December 2025
20	06 December 2025
21	**05 September 2026**
22	**05 September 2026**
23	05 March 2022
24	05 March 2022
25	05 March 2022
26	02 March 2024
27	07 June 2025
28	07 June 2025
29	06 June 2026
30	06 June 2026
31	30 November 2019

Page	Date Last Changed
32	30 November 2019
33	05 June 2021
34	05 June 2021
35	07 December 2024
36	07 December 2024
37	06 June 2026
37A	06 June 2026
37B	29 February 2020
38	29 February 2020
38A	03 March 2018
38B	03 March 2018
39	03 September 2022
40	03 September 2022
41	07 June 2025
42	07 June 2025
43	07 September 2024
44	07 September 2024
45	01 March 2025
46	01 March 2025
47	03 September 2022
48	03 September 2022
49	06 June 2026
49A	06 June 2026
49B	06 June 2026
49C	06 June 2026
49D	06 June 2026
50	06 June 2026
51	06 June 2026
52	06 June 2026

TABLE OF CONTENTS

	Page
Maps	3
Table A Diagrams	5
Special Working Arrangements	38A
Local Instructions	39

LOR	Seq.	Line of Route Description	ELR	Route	Last Updated
LN600	009	Shaftholme Jn. to Reston GSP	ECM5	London North Eastern	09/05/2025

Location	Mileage M Ch	Running lines & speed restrictions	Signalling & Remarks
		UM 50 125 DM	GSM-R TCB Tyneside ROC (T) RA9 Darlington workstation AC:York EC
Hutton Bonville FS OHNS	35 05		
		40	Simplified Bi Directional Signalling Northallerton - Tweedmouth. 50 mph maximum speed in wrong direction unless otherwise shown. See Local Instructions.
East Cowton Crossovers	37 50	40	
Eryholme HABD	38 72	125	See General Instructions for SATWS details at East Cowton Crossovers
	40 05 *	* *	
Croft Viaduct	41 08	115 115	
	41 50 *	* *	TOWS between 39 75 and 41 50. Three independent systems covering:- (1) Bridges 88 and 89. (2) Bridge 87. (3) Bridges 85 and 86.
	42 72	125	
		25	
	43 00 *	*	
		40	DDL = Darlington Down Loop 672m / 735 yds
		DDL	
	43 42 *	To / from Eaglescliffe South Jn. see LN631 seq 001 *	
		25	
	43 50	30 125	
	43 52 *	* *	UD = Up Dinsdale DD = Down Dinsdale
		25	
		30 90	
Darlington South Jn	43 61		
		30	
		UM 90 50 DM	

LOR	Seq.	Line of Route Description	ELR	Route	Last Updated
LN600	010	Shaftholme Jn. to Reston GSP	ECM5	London North Eastern	06/06/2026

Location		Mileage M Ch
Darlington Sourth Jn	Alternative Mileage (DSN1)	43 61
		43 66 *
		43 72 *
		43 74 *
Darlington Down Sidings GF		44 02
	00 08 *	
PL6 Buffer stop	00 00 / -00 01	
DARLINGTON		44 10
		44 14 *
		44 20 *
		44 24 *
Darlington North Jn		44 36

Running lines & speed restrictions

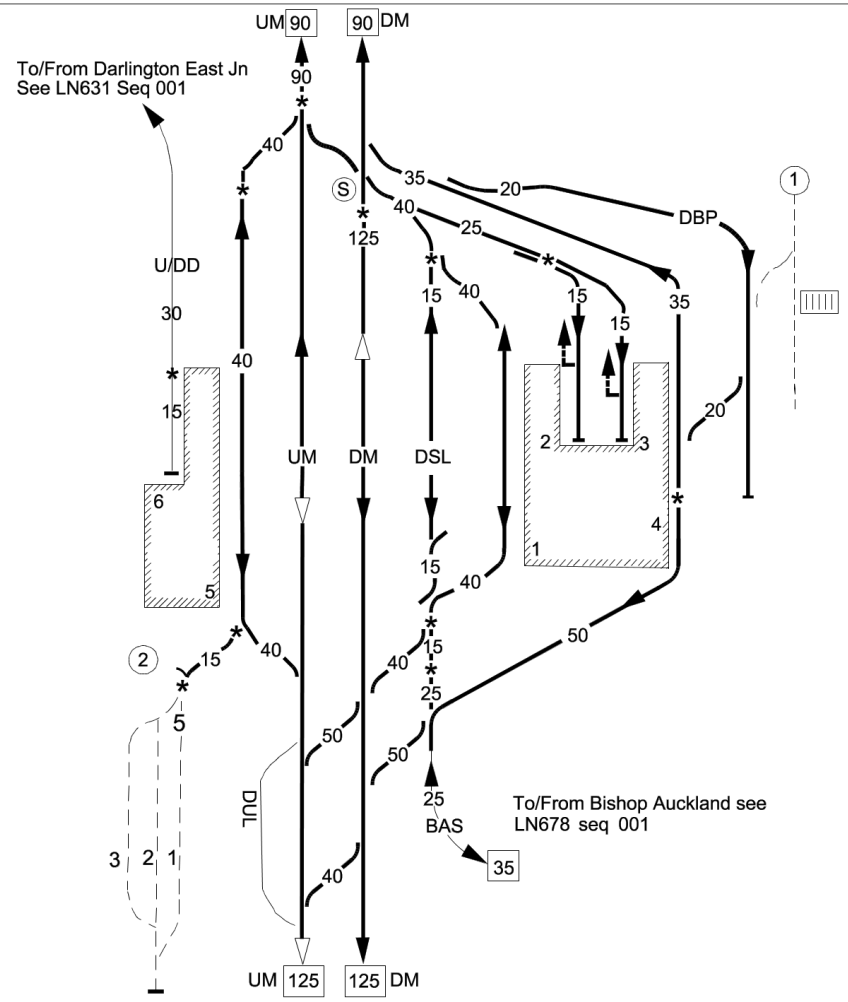

Signalling & Remarks

TCB	Tyneside ROC (T)
RA9	Darlington workstation
	AC:York EC

GSM-R

Simplified Bi Directional Signalling Northallerton - Tweedmouth. 50 mph maximum speed in wrong direction unless otherwise shown.
See Local Instructions.
(S) = Switched Diamonds

U/DD = Up / Down Dinsdale
DSL = Darlington Station Loop
DBP = Darlington Down Bypass = 128m / 131yds.
BAS = Bishop Auckland Single
DUL = Darlington Up Loop - 570m

(1) = To / From Darlington Down sidings (Park Lane)

(2) = To / From Darlington Up sidings
Siding 1 - 722m, Runaround
Siding 2 - 547m, Runaround
Siding 3 - 547m,

PPIs authorised on platforms 1, 4 & 5 for Class 1, 2 & 5 for contingency arrangements and booked attaching only.
PPIs authorised for full use on dead end platforms 2, 3 & 6 for class 1, 2, 3 (ECs), 5, 9 & 0

LOR	Seq.	Line of Route Description	ELR	Route	Last Updated
LN600	011	Shaftholme Jn. to Reston GSP	ECM5	London North Eastern	15/08/2026

Location	Mileage M Ch	Running lines & speed restrictions	Signalling & Remarks
		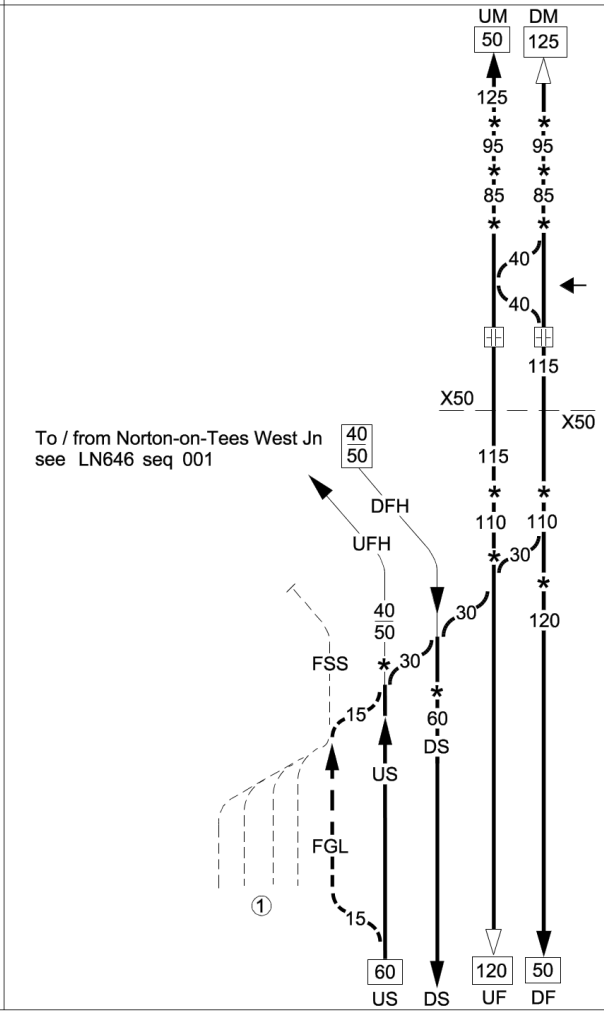	TCB Tyneside ROC (T) RA9 Darlington Workstation AC:York EC GSM-R
	48 00 *		Simplified Bi Directional Signalling Northallerton - Tweedmouth. 50 mph maximum speed in wrong direction unless otherwise shown. See Local Instructions.
	48 50 *		
	49 30 *		TOWS between 48 30 and 49 11 (Bridges 122, 125, 126 and 127)
Aycliffe	49 36		TOWS between 49 29 and 49 51
Aycliffe HABD	49 36		
Aycliffe TSC OHNS	49 60		
Jenkins FPS (OMSL-X)	53 14		OSML - See General Instruction
		To / from Norton-on-Tees West Jn see LN646 seq 001	
	55 20 *		TOWS between 50 20 and 51 71 (Bridges 137, 129 & 131) TOWS between 54 25 and 55 45 (Bridges 148 & 149)
	56 15 *		
Ferryhill South Jn	56 17		
	56 20 *		UFH = Up Ferryhill DFH = Down Ferryhill FSS = Ferryhill Shunt Spur
	55 51 *		
	56 66 *		
			FGL = Ferryhill Up Goods Loop 448m / 490yds
Ferryhill Up Goods Loop	56 73		① = To / from Thrislington Quarry / Ferryhill Up private Sidings (part electrified),& Kelloe Bank Foot Siding (via private sidings).

LOR	Seq.	Line of Route Description	ELR	Route	Last Updated
LN600	012	Shaftholme Jn. to Reston GSP	ECM5	London North Eastern	01/07/2023

Location	Mileage M Ch	Running lines & speed restrictions	Signalling & Remarks
		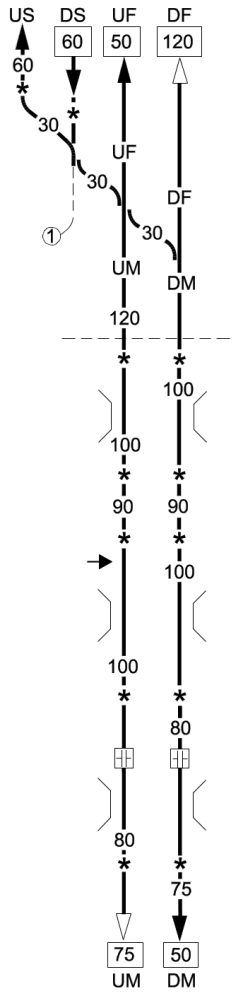	TCB Tyneside ROC (T) RA9 Darlington workstation AC:York EC GSM-R
Tursdale Jn	58 68 * 58 71 *		Simplified Bi Directional Signalling Northallerton - Tweedmouth. 50 mph maximum speed in wrong direction unless otherwise shown. See Local Instructions.
	58 76		TOWS between 58 60 and 59 20 ① = Tursdale Siding
Hett Mill LC (CCTV)	60 21		
	60 44 *		TOWS between 61 00 and 62 00
Croxdale Viaduct	62 13		
	62 20 *		TOWS between 62 20 and 62 60 (Bridge 178).
	63 03 *		
Littleburn HABD	63 59		
Langley Moor Viaduct	64 36		
	64 49 *		
Durham FS OHNS	64 73		
Relly Mill Viaduct	65 20		
	65 62 *		TOWS between 65 60 and 66 20

LOR	Seq.	Line of Route Description	ELR	Route	Last Updated
LN600	015	Shaftholme Jn. to Reston GSP	ECM5	London North Eastern	27/12/2021

Location	Mileage M Ch	Running lines & speed restrictions	Signalling & Remarks
	78 08 *		TCB Tyneside ROC (T) RA9 Gateshead workstation AC:York EC GSM-R
	78 62 *		Bi Directional signalling Low Fell Jn - Benton with all speeds shown. See Local Instructions
	79 01 *		
Askew Road Tunnel (48m / 53 yds)	79 26 to 79 29		DH = Down Hexham UH = Up Hexham
	79 35 *		
King Edward Bridge South Jn	79 42		GR = Gateshead Reversible GEC = Gateshead East Curve
King Edward Bridge North Jn	79 57 79 57 *		
King Edward Bridge	79 57 to 79 70		Newcastle workstation

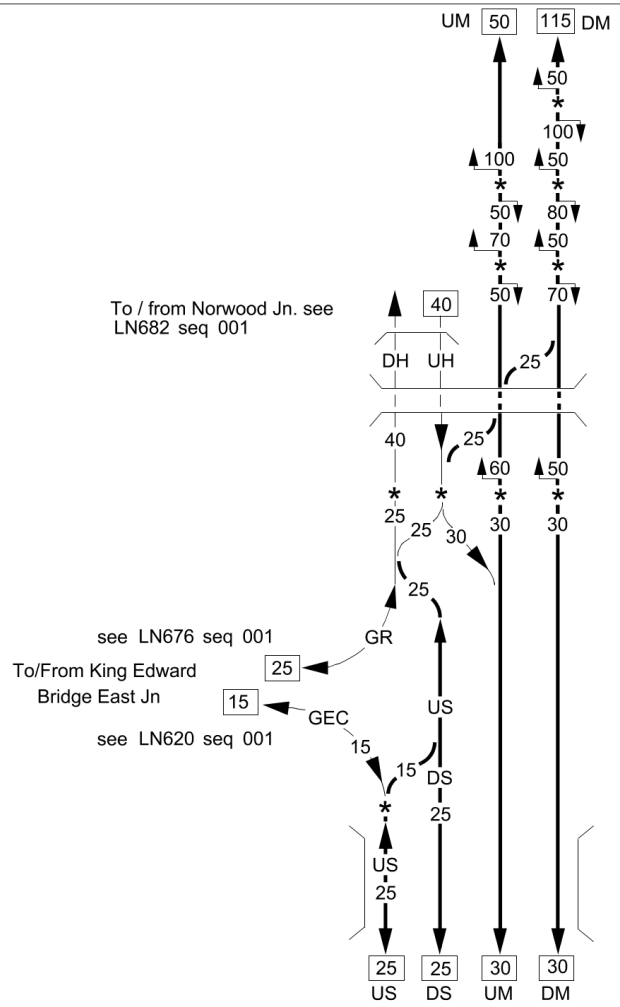

LOR	Seq.	Line of Route Description	ELR	Route	Last Updated
LN600	016	Shaftholme Jn. to Reston GSP	ECM5 ECM6 ECM7	London North Eastern	08/08/2026

Location	Mileage M Ch	Running lines & speed restrictions	Signalling & Remarks
		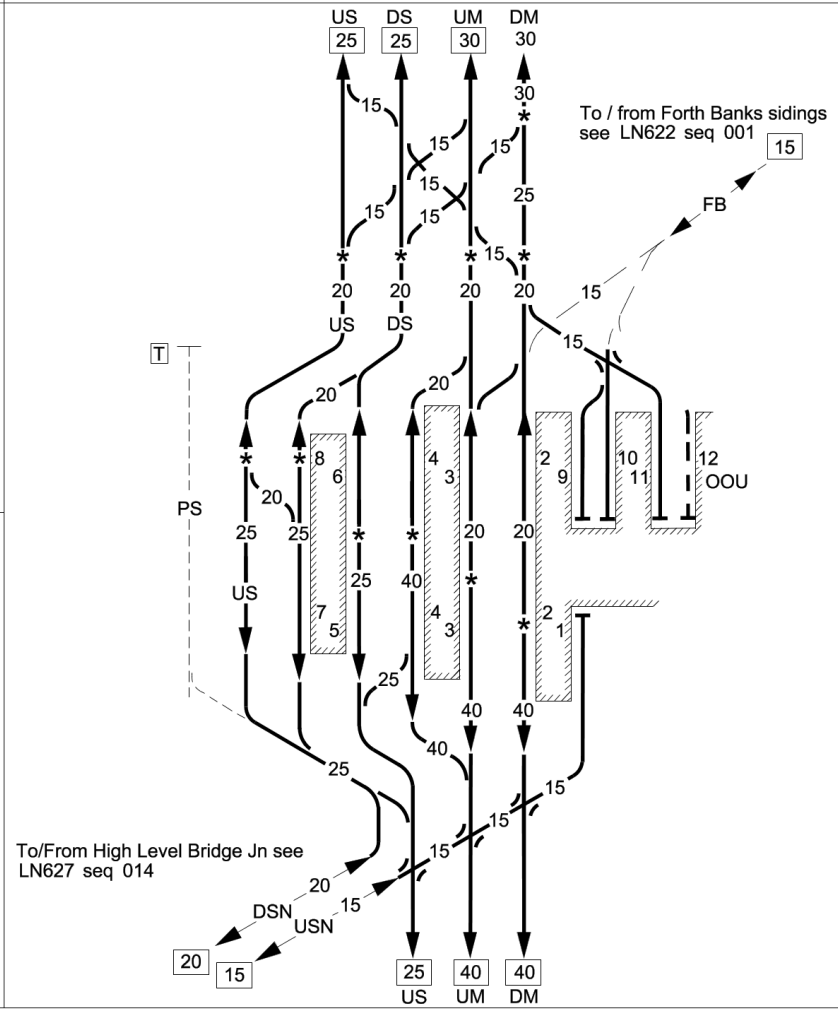	TCB Tyneside ROC (T) RA9 Newcastle workstation AC:York EC GSM-R
	79 70 *		
Newcastle South Jn	79 75		FB = Forth Branch
	79 76 *		
Newcastle West Jn	80 05		
	80 12 *		PP- Permissive Working - platform 1 & platforms 9 to 11 - full use for class 1, 2, 3(ECS), 5, 9 & 0 trains.
NEWCASTLE	80 16		PP-A & PPC-C - Permissive Working Platforms 2-3 - Attaching, Detaching & Contingency use for Class 1,2,3 ECS,5, 9 and 0 Trains
	0 00 0 00 *		
	0 03 *		PS = Provincial Siding
	0 06 *		
Newcastle East Jn	0 14		DSN = Down Sunderland USN = Up Sunderland

LIST OF MODULE PAGES AND DATES

Page	Date Last Changed
1	**05 September 2026**
2	**05 September 2026**
3	01 June 2013
4	01 June 2013
5	06 December 2008
6	06 December 2008
7	06 December 2008
8	06 December 2008
9	03 April 2010
10	03 April 2010
11	06 December 2025
12	06 December 2025
13	06 December 2025
14	06 December 2025
15	28 November 2020
16	28 November 2020
17	07 June 2025
18	07 June 2025
19	07 December 2024
20	07 December 2024
21	06 December 2025
22	06 December 2025
23	**05 September 2026**
24	**05 September 2026**
25	**05 September 2026**
26	**05 September 2026**
27	**05 September 2026**
28	**05 September 2026**
29	**05 September 2026**
30	**05 September 2026**
31	**05 September 2026**
32	**05 September 2026**
33	**05 September 2026**
34	**05 September 2026**
35	**05 September 2026**
36	**05 September 2026**
37	**05 September 2026**
38	**05 September 2026**
39	**05 September 2026**
40	**05 September 2026**
41	06 September 2025
42	06 September 2025
43	02 September 2023
44	02 September 2023
45	07 June 2025
46	07 June 2025
47	04 March 2023
48	04 March 2023
49	29 February 2020
50	29 February 2020
51	07 March 2026
52	07 March 2026
53	29 February 2020

Page	Date Last Changed
54	29 February 2020
55	07 June 2025
56	07 June 2025
57	30 November 2019
58	30 November 2019
59	31 August 2019
60	31 August 2019
61	29 February 2020
61A	29 February 2020
61B	02 March 2019
62	02 March 2019
63	29 February 2020
64	29 February 2020
65	29 February 2020
65A	29 February 2020
65B	02 March 2019
66	02 March 2019
67	02 March 2019
68	02 March 2019
69	29 February 2020
70	29 February 2020
71	**05 September 2026**
72	**05 September 2026**
73	01 June 2024
74	01 June 2024
75	07 June 2025
76	07 June 2025
77	01 June 2024
77A	01 June 2024
77B	06 September 2014
78	06 September 2014
79	01 June 2024
79A	01 June 2024
79B	01 June 2024
80	01 June 2024
81	07 December 2024
82	07 December 2024
83	07 December 2024
84	07 December 2024
85	01 December 2018
86	01 December 2018
86A	01 December 2018
86B	01 December 2018
87	30 November 2019
88	30 November 2019
89	29 February 2020
90	29 February 2020
91	30 May 2020
92	30 May 2020
93	29 February 2020
94	29 February 2020
95	30 November 2019
96	30 November 2019

Page	Date Last Changed
97	02 March 2019
98	02 March 2019
99	02 March 2019
100	02 March 2019
101	29 February 2020
102	29 February 2020
103	29 February 2020
104	29 February 2020
105	30 May 2020
106	30 May 2020
107	07 June 2025
108	07 June 2025
109	31 August 2019
110	31 August 2019
111	04 June 2016
112	04 June 2016
113	29 February 2020
114	29 February 2020
115	29 February 2020
116	29 February 2020
117	04 June 2022
118	04 June 2022
119	29 February 2020
120	29 February 2020
121	30 May 2020
122	30 May 2020
123	31 August 2019
124	31 August 2019
125	30 November 2019
126	30 November 2019
127	05 June 2021
128	05 June 2021
129	04 December 2021
130	04 December 2021
131	04 June 2022
132	04 June 2022
133	**05 September 2026**
134	**05 September 2026**
135	02 June 2018
136	02 June 2018
137	01 June 2024
138	01 June 2024
139	07 June 2025
140	07 June 2025
141	29 August 2020
142	29 August 2020
143	05 June 2021
144	05 June 2021
145	29 February 2020
146	29 February 2020

Page	Date Last Changed
147	01 June 2019
148	01 June 2019
149	03 December 2022
150	03 December 2022
151	05 June 2021
152	05 June 2021
153	29 February 2020
153A	29 February 2020
153B	03 December 2016
154	03 December 2016
155	05 June 2021
156	05 June 2021
157	03 December 2022
157A	03 December 2022
157B	29 February 2020
158	29 February 2020
159	01 June 2013
160	01 June 2013
161	06 September 2025
162	06 September 2025
163	28 November 2020
164	28 November 2020
165	05 June 2021
166	05 June 2021
166A	04 June 2022
166B	04 June 2022
167	07 March 2026
168	07 March 2026
169	01 March 2025
170	01 March 2025
171	03 June 2023
172	03 June 2023
173	03 June 2017
174	03 June 2017
175	07 June 2025
176	07 June 2025
176A	03 June 2017
177	01 December 2018
177A	01 December 2018
177B	01 December 2018
178	01 December 2018
179	30 May 2020
179A	30 May 2020
179B	30 May 2020
180	30 May 2020
181	01 December 2018
182	01 December 2018

LOR	Seq.	Line of Route Description	ELR	Route	Last Updated
LN3201	005	St. Pancras to Tapton Jn (via Derby)	SPC1	London North Eastern	04/10/2025

Location	Mileage M Ch	Running lines & speed restrictions	Signalling & Remarks
		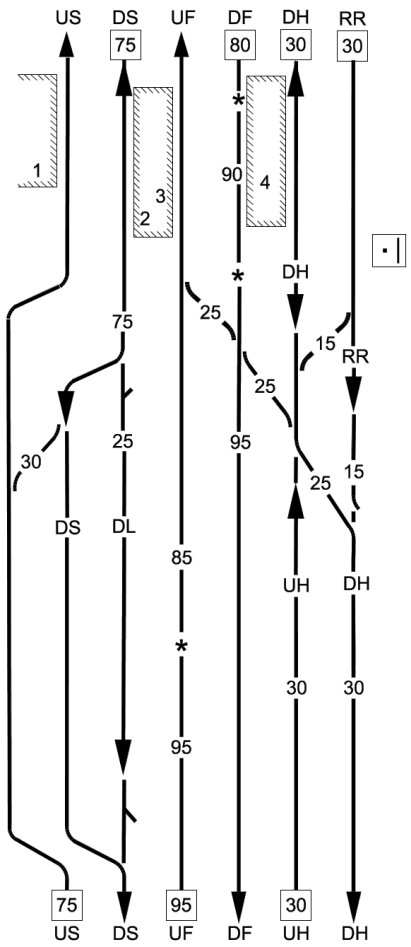	GSM-R TCB West Hampstead Workstation as far as 12m.20ch (WH) RA8 AC: Derby ECR
	3 70 *		Platform lengths: Platform 1 - 245 metres Platform 2 - 245 metres Platform 3 - 245 metres Platform 4 - 245 metres
WEST HAMPSTEAD THAMESLINK	3 73		
West Hampstead P.S. Box (WH)	4 00		DH = Down Hendon (PF) authorised from signal WH31, 3m 38ch to WH449 5m 68ch.
	4 04 *		RR = West Hampstead Run Round 400m / 62 slu UH = Up Hendon
West Hampstead North Jn	4 09		
	4 15		DH to DH crossover Normal lie of points is not straight route
	4 39 *		DL = West Hampstead Down Loop

LOR	Seq.	Line of Route Description	ELR	Route	Last Updated
LN3201	006	St. Pancras to Tapton Jn (via Derby)	SPC1	London North Eastern	10/08/2026

Location	Mileage M Ch
	4 60
Cricklewood South Jn	4 68
CRICKLEWOOD	5 09
Cricklewood Curve Jn	5 19
	5 20 *
	5 20 *
	5 27 *
	5 30 *

Running lines & speed restrictions

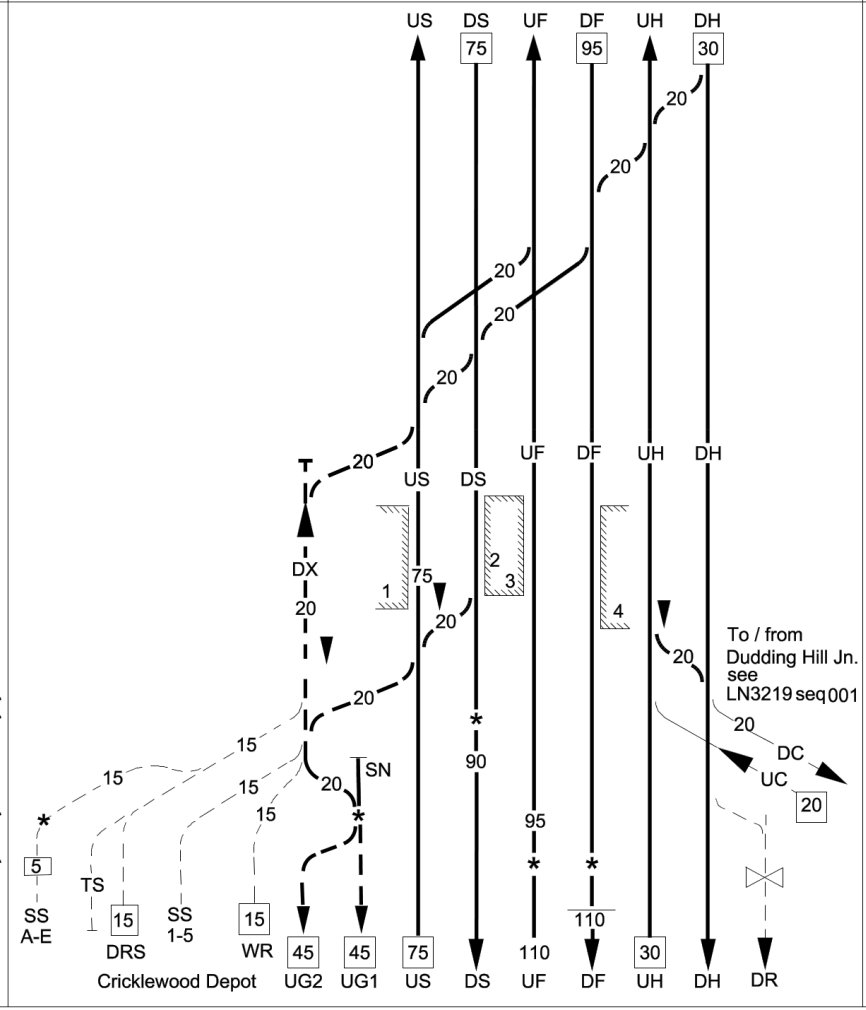

Signalling & Remarks

GSM-R

TCB West Hampstead Workstation as far as 12m.20ch (WH)
RA8 AC: Derby ECR

UH = Up Hendon (PF throughout) Not Electrified

DH = Down Hendon (PF from WH31 signal 3m 38ch to WH449 signal 5m 68ch) Not Electrified.

Contingency stabling (electrified)
UG1 or UG2 + South Neck 610m / 95slu

Platform lengths:
Platform 1 - 171 metres
Platform 2 - 171 metres
Platform 3 - 171 metres
Platform 4 - 183 metres

AWS not provided on goods lines

UG1 = Up Goods No1 (PF) 476m / 74 slu
UG2 = Up Goods No2 (PF) 476m / 74slu

DC = Down Cricklewood Curve
UC = Up Cricklewood Curve
DR = Down Reception Siding.

SN = South Neck 37m/5slu Electrified

Cricklewood Depot: -

Cricklewood Depot SB (CD)
AC: Derby ECR

DX = Depot Exit Road (PF)
TS = Cricklewood Depot Tamper Siding (length = 110m - Not Electrified)
DRS = Cricklewood Depot Departure Road South.
SS A-E = To / From Cricklewood Depot South Sidings Nos A to E (length = 502 Metres).
SS 1-5 = To / From Cricklewood Depot South Sidings Nos 1 to 5 (length = 500 Metres).
WR = Cricklewood Depot Washer Road.

LOR	Seq.	Line of Route Description	ELR	Route	Last Updated
LN3201	007	St. Pancras to Tapton Jn (via Derby)	SPC1	London North Eastern	10/08/2026

Location	Mileage M Ch
	5 40 *
Cricklewood Depot LC (AHBC)	5 55 *
	5 56
	5 57 *
Cricklewood Depot Jn	5 63
Cricklewood Depot SB	5 63
BRENT CROSS WEST	5 75
Brent Curve Jn	6 04
	6 10 *
	6 21 *

Running lines & speed restrictions

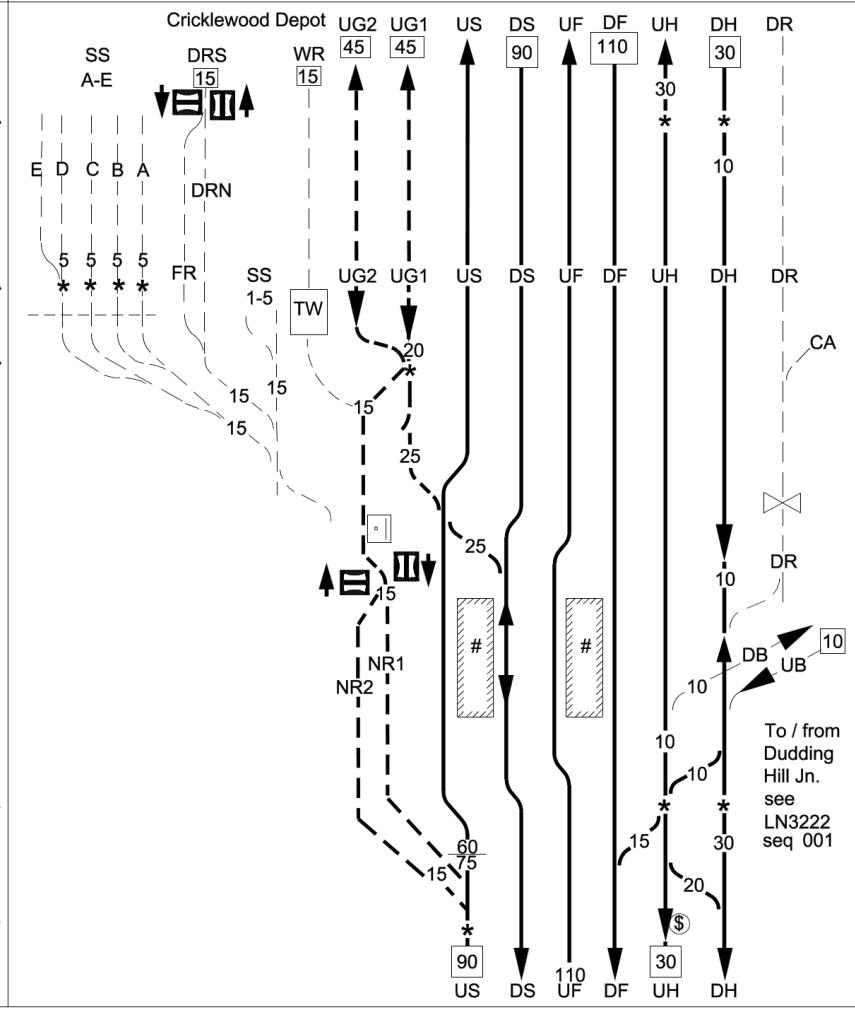

Signalling & Remarks

GSM-R

TCB West Hampstead Workstation as far as 12m.20ch (WH)
RA8 AC: Derby ECR

UH = Up Hendon (PF throughout) Not Electrified.
DH = Down Hendon (PF from WH31 signal 3m 38ch to WH449 signal 5m 68ch) Not Electrified.

DR = Down Reception Siding.
AWS not provided on goods lines
CA = Cricklewood Aggregate Terminal (C.A.T)
DB = Down Brent Curve
UB = Up Brent Curve
# = Brent Cross West

Cricklewood Depot: -

Cricklewood Depot SB (CD)
AC: Derby ECR

UG1 = Up Goods No1 (PF) 476m / 74 slu
UG2 = Up Goods No2 (PF) 476m / 74 slu

TW = Cricklewood Depot Train Washer 3 MPH
WR = Cricklewood Depot Washer Road
DRS = Cricklewood Depot Departure Road South.
DRN = Cricklewood Depot Departure Road North.
SS A-E = To / From Cricklewood Depot South Sidings Nos A to E (length = 502 Metres).
SS 1-5 = To / From Cricklewood Depot South Sidings Nos 1 to 5 (length = 500 Metres).
FR = Cricklewood Depot Fuel Road (not electrified) Class 810 APCO location for fuel road
NR1 = Cricklewood Depot North Reception Road No1 (length = 287 Metres)
NR2 = Cricklewood Depot North Reception Road No2 (length = 287 Metres)

$ = Down Direction from Brent Curve Jn. available for Shunt Moves only.

LOR	Seq.	Line of Route Description	ELR	Route	Last Updated
LN3201	008	St. Pancras to Tapton Jn (via Derby)	SPC1	London North Eastern	10/08/2026

Location	Mileage M Ch	Running lines & speed restrictions	Signalling & Remarks
HENDON	6 20 6 40 * 6 79 7 06 * 7 33 *	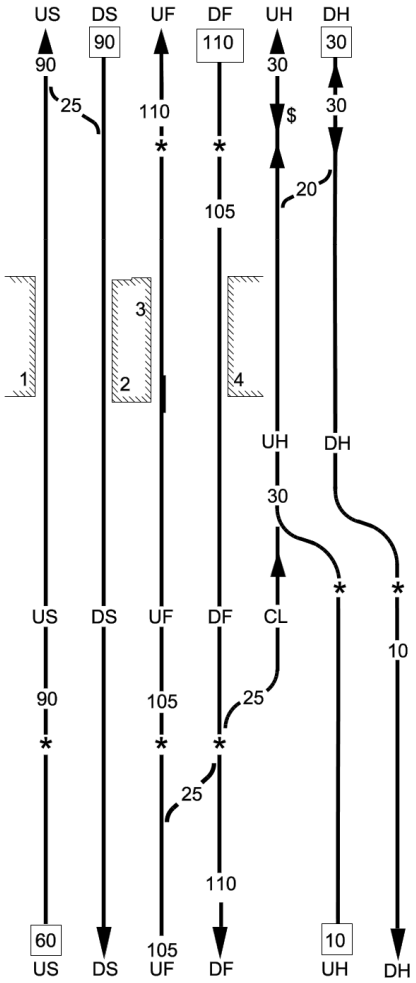	GSM-R TCB West Hampstead Workstation as far as 12m.20ch (WH) RA8 AC: Derby ECR UH = Up Hendon (PF throughout) Not Electrified. DH = Down Hendon. Not electrified $ = Down direction from Brent Curve Jn. available for Shunt moves only. Platform lengths: Platform 1 - 166 metres Platform 2 - 170 metres Platform 3 - 172 metres Platform 4 - 166 metres CL = Hendon Chord Line.

LOR	Seq.	Line of Route Description	ELR	Route	Last Updated
LN3201	009	St. Pancras to Tapton Jn (via Derby)	SPC1	London North Eastern	10/08/2026

Location	Mileage M Ch	Running lines & speed restrictions	Signalling & Remarks
		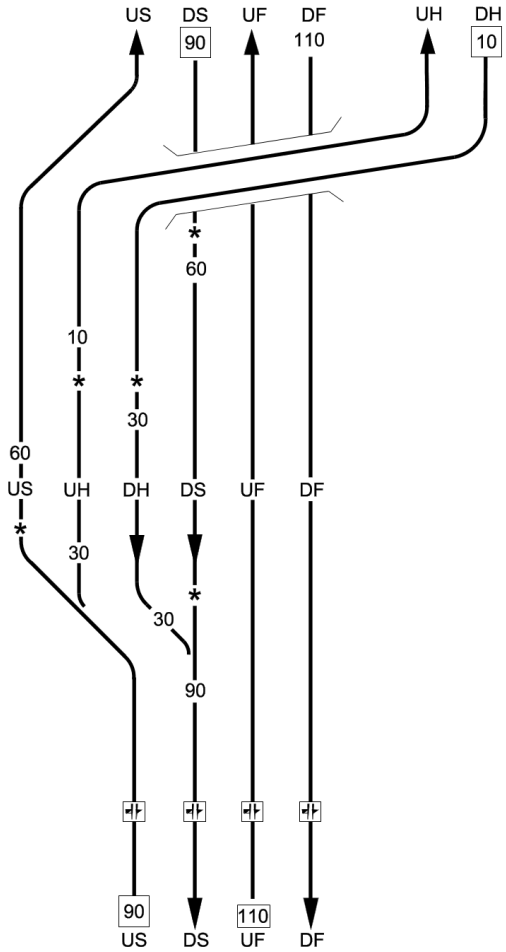	TCB West Hampstead Workstation as far as 12m.20ch (WH) RA8 AC: Derby ECR GSM-R UH = Up Hendon (PF throughout) Not Electrified. DH = Down Hendon. Not Electrified.
	7 50 *		
	7 60 *		
	7 68 *		
Silkstream Jn	7 72		
	7 75 *		
Grahame Park OHNS	8 29		

LOR	Seq.	Line of Route Description	ELR	Route	Last Updated
LN3201	010	St. Pancras to Tapton Jn (via Derby)	SPC1	London North Eastern	10/08/2026

Location	Mileage M Ch	Running lines & speed restrictions	Signalling & Remarks
		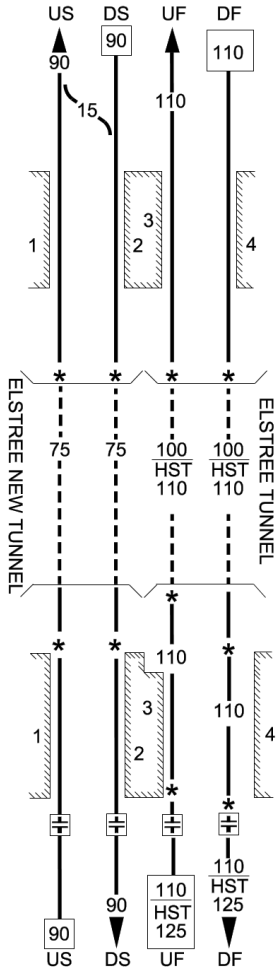	TCB West Hampstead Workstation as far as 12m.20ch (WH) RA8 AC: Derby ECR GSM-R
MILL HILL BROADWAY	9 28		Platform lengths: Mill Hill Broadway Platform 1 - 245 metres Platform 2 - 245 metres Platform 3 - 245 metres Platform 4 - 245 metres
Elstree Tunnels (967 metres / 1058 yards)	11 38 * to 12 06		Trolleys must only be placed on the line in these tunnels when the line is under Possesion
	12 06 *		
	12 19 *		
ELSTREE AND BOREHAMWOOD	12 35		Platform lengths: Elstree and Borehamwood Platform 1 - 245 metres Platform 2 - 245 metres Platform 3 - 176 metres Platform 4 - 177 metres
	12 70 * 12 71 *		
Borehamwood OHNS	13 32		

LOR	Seq.	Line of Route Description	ELR	Route	Last Updated
LN3201	011	St. Pancras to Tapton Jn (via Derby)	SPC1	London North Eastern	10/08/2026

Location	Mileage M Ch	Running lines & speed restrictions	Signalling & Remarks
			TCB Luton Workstation as far as 31.20 RA8 AC: Derby ECR GSM-R
Radlett Jn	14 33		
RADLETT	15 17		Platform lengths: Radlett Platform 1 - 245 metres Platform 2 - 245 metres Platform 3 - 170 metres Platform 4 - 170 metres
Radlett Private Sidings	16 27		Radlett private sidings & crossover DS/US not electrified

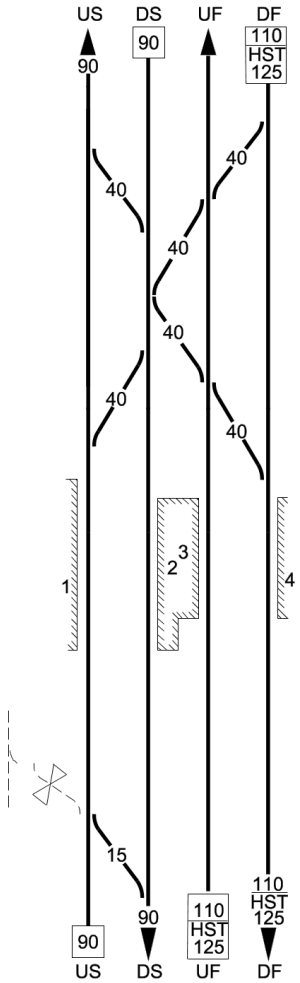

LOR	Seq.	Line of Route Description	ELR	Route	Last Updated
LN3201	012	St. Pancras to Tapton Jn (via Derby)	SPC1	London North Eastern	10/08/2026

Location	Mileage M Ch	Running lines & speed restrictions	Signalling & Remarks
		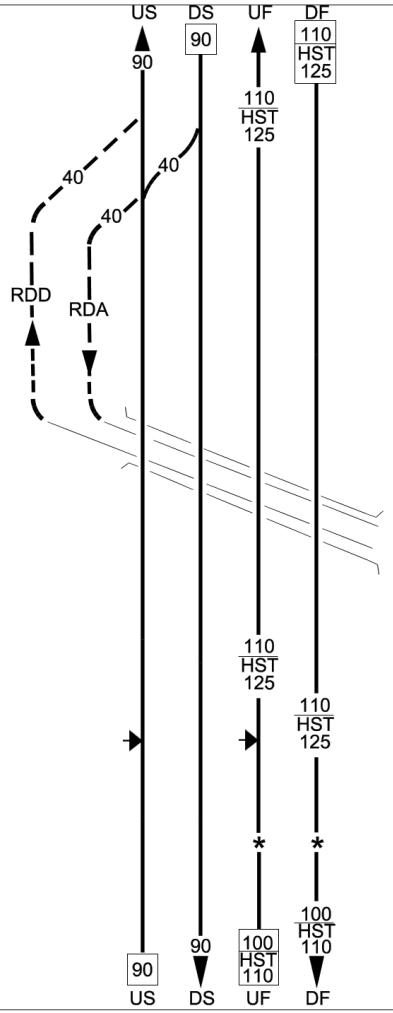	TCB Luton Workstation as far as 12m.20ch RA8 AC: Derby ECR GSM-R
Site of future Radlett Depot Jn	17 10		
	17 17		New S&C installed secured out of use pending final commisioning
	17 60		US = Up Slow DS = Down Slow UF = Up Fast DF = Down Fast Future RDD = Radlett Depot Departure line Future RDA = Radlett Depot Arrival line
Site of future Radlett Strategic Rail Freight Interchange (SRFI)	17 63		
Napsbury HABD	18 00		
	18 38 *		

LOR	Seq.	Line of Route Description	ELR	Route	Last Updated
LN3201	013	St. Pancras to Tapton Jn (via Derby)	SPC1	London North Eastern	10/08/2026

Location	Mileage M Ch	Running lines & speed restrictions	Signalling & Remarks
ST. ALBANS	19 21 * 19 23 * 19 24 * 19 57 19 62 * 19 65 * 19 71 20 14 * 20 28 * 20 30 * 20 71 * 20 77 *	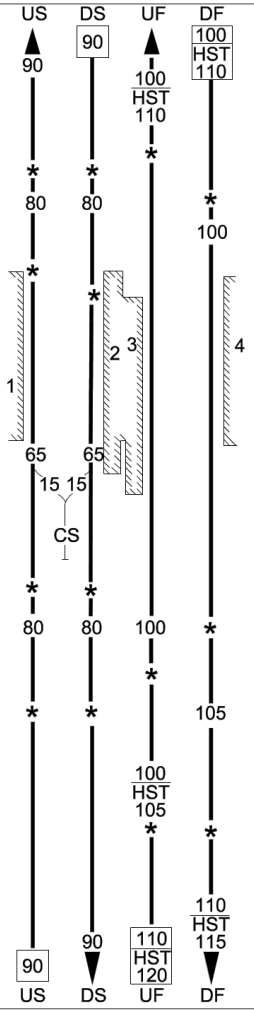	TCB Luton Workstation as far as 12m.20ch RA8 AC: Derby ECR GSM-R Platform lengths: Platform 1 - 245 metres Platform 2 - 245 metres Platform 3 - 245 metres Platform 4 - 245 metres US = Up Slow DS = Down Slow UF = Up Fast DF = Down Fast CS = St Albans Centre Siding

LOR	Seq.	Line of Route Description	ELR	Route	Last Updated
LN3201	014	St. Pancras to Tapton Jn (via Derby)	SPC1	London North Eastern	10/08/2026

Location	Mileage M Ch	Running lines & speed restrictions	Signalling & Remarks
		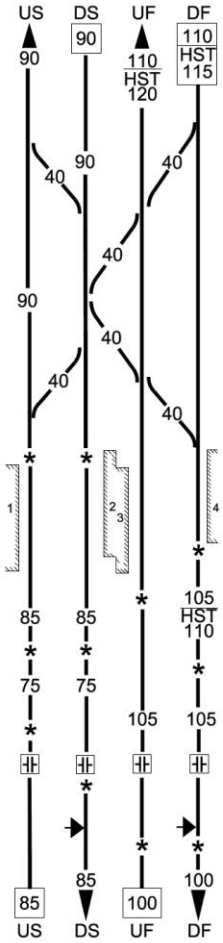	TCB Luton Workstation as far as 12m.20ch RA8 AC: Derby ECR GSM-R
Harpenden Jn	24 25		
	24 38 *		Platform lengths: Platform 1 - 245 metres Platform 2 - 245 metres Platform 3 - 245 metres Platform 4 - 245 metres
HARPENDEN	24 51		
	24 57 *		
	24 64 *		
	24 78 *		
	25 01 *		
	25 17 *		
East Hyde OHNS	26 24		
	26 38 *		
Chiltern Green HABD	27 69 *		

LOR	Seq.	Line of Route Description	ELR	Route	Last Updated
LN3201	015	St. Pancras to Tapton Jn (via Derby)	SPC1	London North Eastern	17/07/2026

Location	Mileage M Ch	Running lines & speed restrictions	Signalling & Remarks
		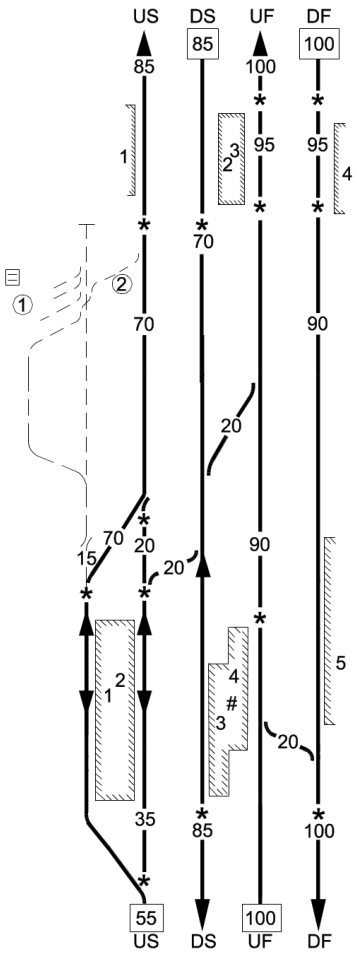	TCB West Hampstead PSB (WH) RA8 AC: Derby ECR GSM-R
	28 26 *		Platform lengths: Platform 1 - 245 metres Platform 2 - 245 metres Platform 3 - 245 metres Platform 4 - 245 metres
LUTON AIRPORT PARKWAY	29 19		
	29 57 * 29 59 *		
Luton Up Sidings GSP	29 69		① = To/from Crescent Yard
	30 09 *		
Luton South Jn	30 12		
	30 15 * 30 17 *		Platform lengths: Platform 1 - 255 metres PP-C Platform 2 - 255 metres PP Platform 3 - 254 metres *See below Platform 4 - 255 metres PP-C Platform 5 - 251 metres # Platform 4 Turnback South to North 243 metres WH102 - WH585
LUTON	30 19		
Crossover moved 36m north to be outside platform limits. Centre of crossover now at 30m 621y	30 28 *		* PP-C applies in Platform 3 in the Up Direction PP applies in Platform 3 in the Down Direction
	30 30 *		
	30 39 *		

LOR	Seq.	Line of Route Description	ELR	Route	Last Updated
LN3201	016	St. Pancras to Tapton Jn (via Derby)	SPC1	London North Eastern	10/08/2026

Location	Mileage M Ch	Running lines & speed restrictions	Signalling & Remarks
			TCB Luton workstation as far as 31.20 RA8 AC: Derby ECR GSM-R
	30 43 *		
Luton North Jn	30 52		
	30 75 *		
	30 79 *		
	31 16 *		
Limbury Rd Up Line GF (No. 1)	31 45		
Limbury Rd Dn. Line GF (No. 2)	31 69		

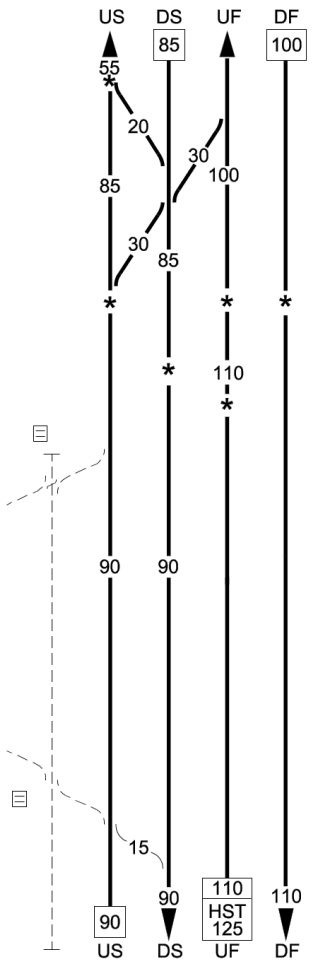

LOR	Seq.	Line of Route Description	ELR	Route	Last Updated
LN3201	017	St. Pancras to Tapton Jn (via Derby)	SPC1	London North Eastern	10/08/2026

Location	Mileage M Ch	Running lines & speed restrictions	Signalling & Remarks
		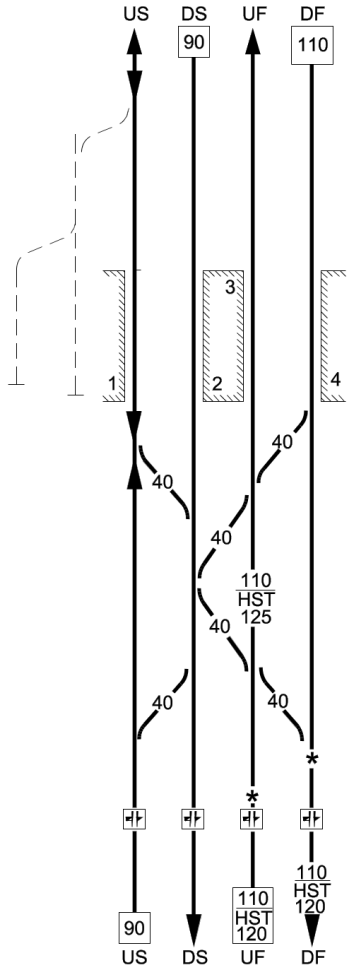	TCB Bedford Workstation RA8 AC: Derby ECR GSM-R
Leagrave Sidings	32 48		Siding Length 1 - 191metre (29 SLU) 2 - 78metre (12SLU)
LEAGRAVE	32 60		Platform lengths: Leagrave Platform 1 - 245 metres Platform 2 - 245 metres Platform 3 - 177 metres Platform 4 - 245 metres
Leagrave Jn	33 18		
	33 40 *		
	34 23 * 35 35		
Long Meadow Farm OHNS			

LOR	Seq.	Line of Route Description	ELR	Route	Last Updated
LN3201	018	St. Pancras to Tapton Jn (via Derby)	SPC1	London North Eastern	10/08/2026

Location	Mileage M Ch	Running lines & speed restrictions	Signalling & Remarks
			TCB Bedford Workstation RA8 AC: Derby ECR GSM-R
Sundon Jn	35 43 * 35 49		USL - Up Sundon Loop (Not Electrified)
Harlington Jn	37 00		
	37 07 *		
	37 09 *		
HARLINGTON	37 22		Platform 1 - 245 metres Platform 2 - 245 metres Platform 3 - 168 metres Platform 4 - 178 metres
	37 25 *		
	37 32 *		
	40 09 *		Platform lengths: Platform 1 - 245 metres Platform 2 - 245 metres Platform 3 - 245 metres Platform 4 - 245 metres
FLITWICK	40 18		
	40 20 *		

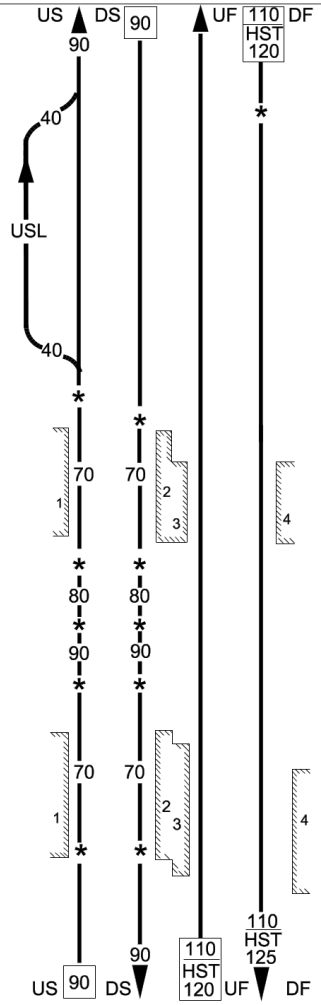

LOR	Seq.	Line of Route Description	ELR	Route	Last Updated
LN3201	019	St. Pancras to Tapton Jn (via Derby)	SPC1	London North Eastern	10/08/2026

Location	Mileage M Ch	Running lines & speed restrictions	Signalling & Remarks
Flitwick Jn	40 47	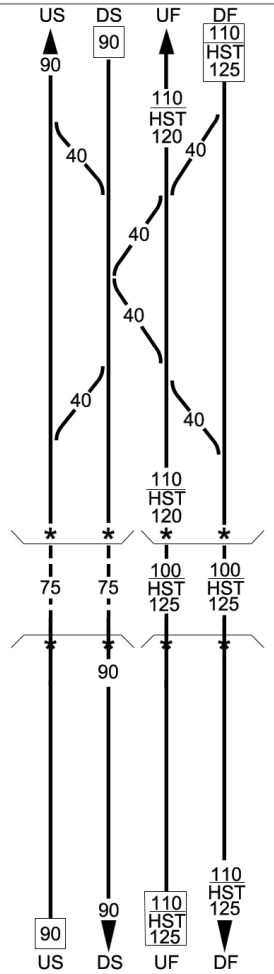	TCB Bedford Workstation RA8 AC: Derby ECR GSM-R
Ampthill Tunnels (443m / 715yds)	42 18 * to 42 52 42 55 *		

LOR	Seq.	Line of Route Description	ELR	Route	Last Updated
LN3201	020	St. Pancras to Tapton Jn (via Derby)	SPC1	London North Eastern	10/08/2026

Location	Mileage M Ch	Running lines & speed restrictions	Signalling & Remarks
			TCB Bedford Workstation RA8 AC: Derby ECR GSM-R
Elstow Private Sidings	47 18		
	48 30 *		
Bedford South Jn	48 60		

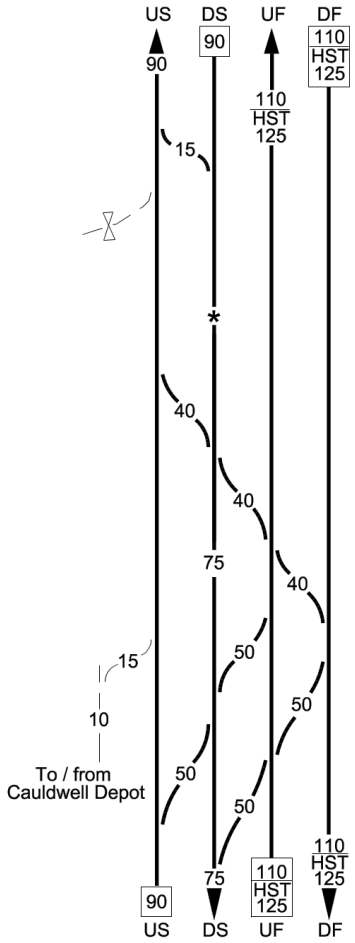

LOR	Seq.	Line of Route Description	ELR	Route	Last Updated
LN3201	021	St. Pancras to Tapton Jn (via Derby)	SPC1	London North Eastern	10/08/2026

Location	Mileage M Ch	Running lines & speed restrictions	Signalling & Remarks
		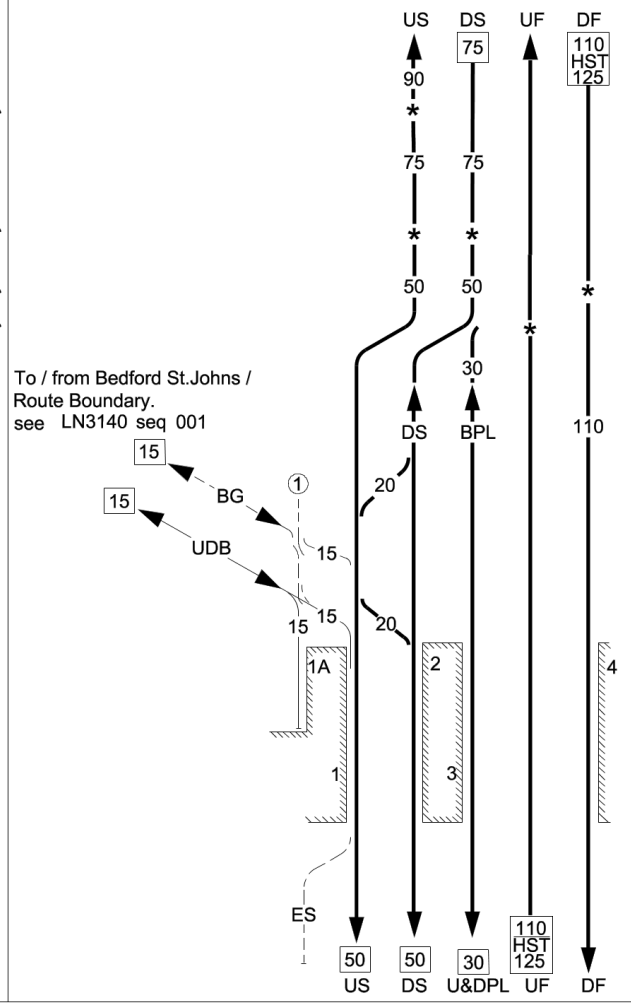	TCB Bedford Station RA8 AC: Derby ECR GSM-R
	49 00 *		
	49 40 *		
	49 46 *		BG = Up & Down Bletchley Goods
	49 59 *		UDB = Up & Down Bletchley
		To / from Bedford St.Johns / Route Boundary. see LN3140 seq 001	BPL = Bedford Platform Loop
Bedford Station Jn	49 60		Full permissive working (PP) authorised in platforms 1, 2 and 3 for trains arriving from the South only
BEDFORD	49 65		Platform lengths Bedford: Platform 1A - 92 metres Platform 1 - 252 metres Platform 2 - 261 metres Platform 3 - 261 metres Platform 4 - 245 metres ES = Bedford EMU Stabling Siding

LOR	Seq.	Line of Route Description	ELR	Route	Last Updated
LN3201	022	St. Pancras to Tapton Jn (via Derby)	SPC2	London North Eastern	01/11/2025

Location	Mileage M Ch	Running lines & speed restrictions	Signalling & Remarks
		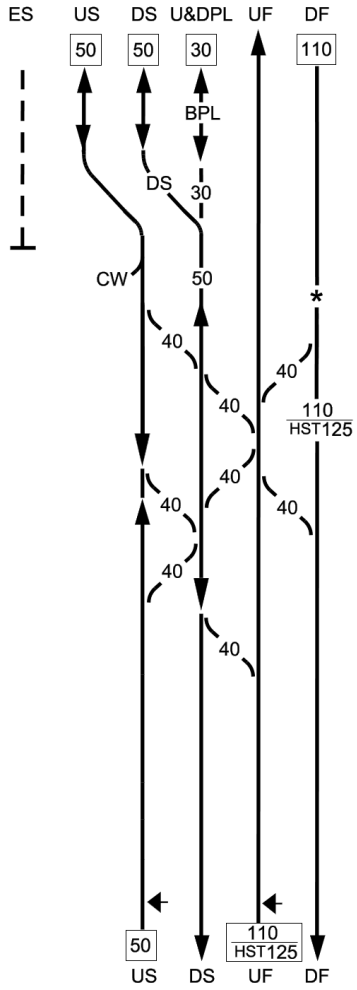	GSM-R TCB Bedford Workstation RA8 AC: Derby ECR BPL = Bedford Platform Loop
	50 11 *		CW Up Slow at 50m 8ch Normal lie of C W (935) is not straight route
Bedford North Jn	50 35		
	53 20		Signal boundary change WH / KWH
Oakley HABD	53 60		Derby EMCC (KWH) Kettering workstation AC: Derby ECR

LOR	Seq.	Line of Route Description	ELR	Route	Last Updated
LN3207	006	Trent East Jn to Clay Cross North Jn	TCC	London North Eastern	09/11/2019

Location	Mileage M Ch	Running lines & speed restrictions	Signalling & Remarks
		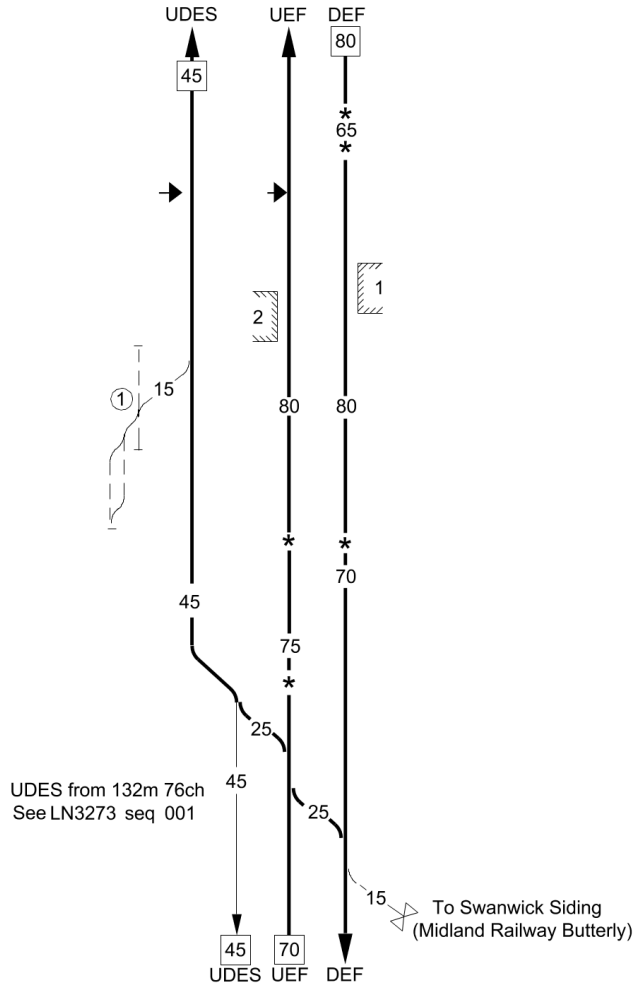	TCB Derby EMCC (TC) RA8 Erewash Workstation GSM-R Platform lengths: Langley Mill Up Erewash Fast - 96 metres Down Erewash Fast - 96 metres UDES - Up and Down Erewash Slow UEF - Up Erewash Fast DEF - Down Erewash Fast (1) Sidings out of use
	127 66 *		
	128 18 *		
Langley Mill HABD	129 27		
LANGLEY MILL	129 68		
Stoneyford sidings	131 53		
	132 38 *		
	132 68 *		
Codnor Park Jn	132 76		

LOR	Seq.	Line of Route Description	ELR	Route	Last Updated
LN3207	007	Trent East Jn to Clay Cross North Jn	TCC	London North Eastern	17/08/2026

Location	Mileage M Ch	Running lines & speed restrictions	Signalling & Remarks
		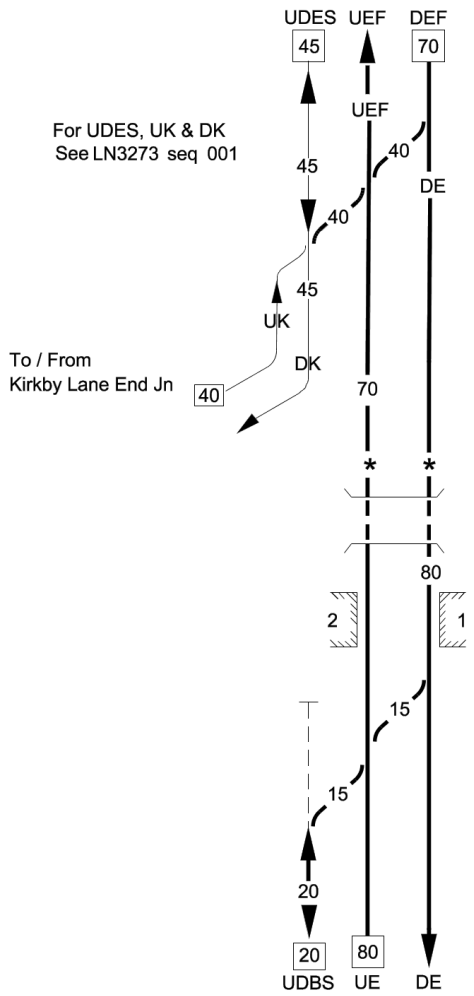	TCB Derby EMCC (TC) RA8 Erewash Workstation GSM-R UDES - Up and Down Erewash Slow UEF - Up Erewash Fast DEF - Down Erewash Fast UE - Up Erewash DE - Down Erewash UK - Up Kirkby DK - Down Kirkby
Ironville Jn	133 18		
	133 72		
	134 22 *		
Alfreton Tunnel (768m / 840 yds)	135 11 to 135 50		
ALFRETON	136 07		Platform lengths: Alfreton Down Erewash - 191 metres Up Erewash-190 metres
Blackwell South Jn (ALFRETON)	136 67		UDBS - Up and Down Blackwell Slow

LOR	Seq.	Line of Route Description	ELR	Route	Last Updated
LN3601	001	Kettering North Jn to Manton Jn	GSM1	London North Eastern	07/05/2026

Location	Mileage M Ch	Running lines & speed restrictions	Signalling & Remarks
Kettering North Jn	74 00		TCB Derby EMCC (KM) RA8 Kettering Workstation AC: Derby ECR GSM-R
	74 41 *		UC = Up Corby DC = Down Corby
	74 72 *		= Advance Traction Changeover
Warning of traction changeover	75 57		
Lower pantograph sign	75 77		= Manual Power Change Over - Pantograph Lower
	77 23		
	78 25 *		Electrification Limits: Down Corby 79m 30ch
	78 60 *		
Raise pantograph sign	79 06		
Corby Station South Jn	79 25		= Manual Power Change Over - Pantograph Raise
Warning of traction Changeover	79 27		
	79 35 *		= Advance Traction Changeover

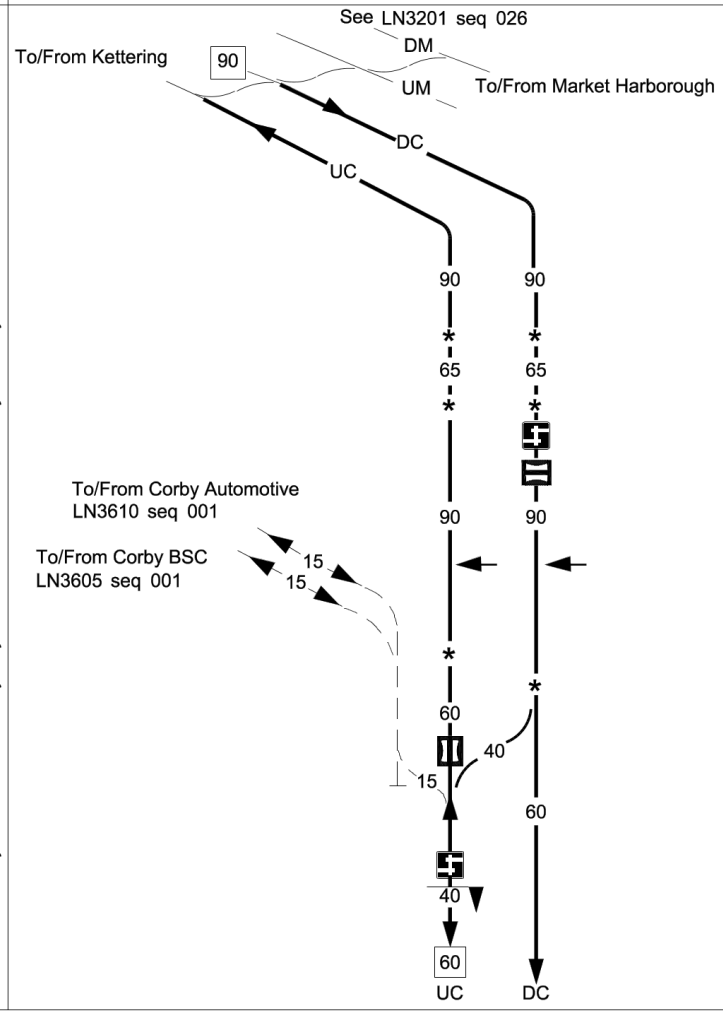

LOR	Seq.	Line of Route Description	ELR	Route	Last Updated
LN3601	002	Kettering North Jn to Manton Jn	GSM1	London North Eastern	27/05/2023

Location	Mileage M Ch	Running lines & speed restrictions	Signalling & Remarks
			GSM-R TCB Derby EMCC (KM) RA8 Kettering Workstation AC: Derby ECR
CORBY	79 40		Platform Length: Corby - 247 metres UC = Up Corby DC = Down Corby None Electrified Electrification Limits: UC - 79 miles 60ch Corby Run Round Sidings - 79 miles 68ch (1) Standage in both sidings is 743m / 812 yards
Corby Station North Junction	79 65		
Corby Tunnel (1755m / 1 mile, 160 yards)	80 74 to 82 01	T T	Tel. on tunnel face Up side Tel. on tunnel face Up side
Harringworth Viaduct (1164m / 1272 yards)	85 00 85 76 *	T	Tel. on Up side
Seaton Tunnel (188m / 206 yards)	86 24 to 86 33 86 43 *		

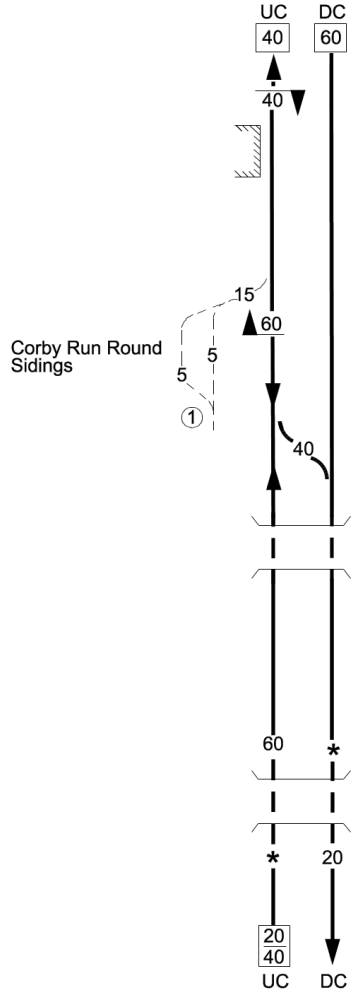

LIST OF MODULE PAGES AND DATES

Page	Date Last Changed
1	**05 September 2026**
2	**05 September 2026**
3	02 December 2006
4	02 December 2006
5	02 December 2006
6	02 December 2006
7	02 December 2006
8	02 December 2006
9	07 June 2025
10	07 June 2025
11	05 March 2016
12	05 March 2016
13	05 March 2016
14	05 March 2016
15	03 December 2022
16	03 December 2022
17	05 March 2016
18	05 March 2016
19	30 May 2020
20	30 May 2020
21	29 August 2020
22	29 August 2020
23	07 December 2024
24	07 December 2024
25	01 June 2024
26	01 June 2024
26A	01 June 2024
26B	01 June 2024
27	04 June 2022
28	04 June 2022
29	04 June 2022
30	04 June 2022
31	03 December 2022
32	03 December 2022
33	02 September 2023
34	02 September 2023
35	04 September 2021
36	04 September 2021
37	05 June 2021
38	05 June 2021
39	07 March 2026
40	07 March 2026
41	02 June 2018
42	02 June 2018
43	**05 September 2026**

Page	Date Last Changed
44	**05 September 2026**
44A	07 December 2024
44B	07 December 2024
45	02 December 2017
46	02 December 2017
47	02 December 2017
48	02 December 2017
49	07 September 2024
50	07 September 2024
51	04 June 2016
52	04 June 2016
53	07 December 2024
54	07 December 2024
55	02 March 2019
56	02 March 2019
57	03 June 2017
58	03 June 2017
59	03 June 2017
60	03 June 2017
61	03 June 2017
62	03 June 2017
63	05 June 2010
64	05 June 2010
65	05 March 2016
66	05 March 2016
67	05 June 2010
68	05 June 2010
69	02 December 2017
70	02 December 2017
71	05 March 2016
72	05 March 2016
73	07 December 2013
74	07 December 2013
75	03 June 2017
76	03 June 2017
77	05 March 2016
78	05 March 2016
79	07 June 2025
80	07 June 2025
81	02 June 2012
82	02 June 2012

TABLE OF CONTENTS

	Page
Maps	3
Table A Diagrams	7
Special Working Arrangement	65
Local Instructions	69

LOR	Seq.	Line of Route Description	ELR	Route	Last Updated
LN756	001	Scunthorpe Trent Jn. to Roxby	SCD NOP	London North Eastern	19/03/2016

Location	Mileage M Ch	Running lines & speed restrictions	Signalling & Remarks
		To / from Wrawby Jn LN752 seq 002 / To / from Wrawby Jn LN752 seq 002	TCB Scunthorpe SB (S) RA8 — GSM-R AWS not provided TPWS not provided
Trent Jn	0 00 *	15 *	OT(S) Train Staff Kept at North Lincoln Jn in Chargemans cabin
Dawes Lane Jn (Former)	0 28	20	Change of ELR 0m 28ch - SCD to NOP
	0 25		
Dawes Lane LC (AOCL+B)	0 32	STOP / STOP	STOP Before passing over level crossing
	1 36 *	* 10	
Normanby Park G.F.	2 11		
	2 63 *	* ① 25	① - BSC line To/From Flixborough Wharf
		②	② - Normanby Park Sidings — GSM-R
Roxby	3 60		Up: Start of GSM-R area at 3m 60ch Down: End of GSM-R area at 3m 60ch
End of Line	4 20		

LOR	Seq.	Line of Route Description	ELR	Route	Last Updated
LN758	001	Brancliffe East Jn to Kirk Sandall Jn.	BKS	London North Eastern	25/05/2026

Location	Mileage M Ch	Running lines & speed restrictions	Signalling & Remarks
Brancliffe East Jn	0 00	To/From Shireoaks West Jn; 60; UM; See LN736 seq 010; To/From Woodhouse Jn; DM; 45/60; 15	TCB Worksop SB (WP) RA8; GSM-R
	0 03 *	15 *; 15 * DY; 25; 25	Goods Line throughout AWS provided at M37 and M38 Fixed Distants DY = Down South Yorkshire UY = Up South Yorkshire SY = Down / Up South Yorkshire
	3 14 *	UY; * 15	
Dinnington Jn	3 17	25; SY; 1; 15	TB
	9 23		TCB Maltby Colliery SB (M)
Maltby Colliery SB (M)	9 31	•; 25; 15 SY PL	SY = Down/Up South Yorkshire = 355 m / 388yds PL = Down/Up Passing Loop - Run Round = 418m / 457 yds to signal M8, 524 m / 573 yds to M7. AD = Arrivals / Departure Loop = 415 m / 453 yds 1 - Bunker Line
	9 62	25	
	11 17 *	* 35; Up direction; Down	
	14 20 *	* 25	Doncaster SB (D)
		25 SY	

LIST OF MODULE PAGES AND DATES

Page	Date Last Changed
1	**05 September 2026**
2	**05 September 2026**
3	06 December 2008
4	06 December 2008
5	06 December 2025
6	06 December 2025
7	03 September 2016
8	03 September 2016
9	04 June 2016
10	04 June 2016
11	07 September 2024
12	07 September 2024
13	07 June 2025
14	07 June 2025
15	04 June 2016
16	04 June 2016
17	02 June 2018
18	02 June 2018
19	02 December 2023
20	02 December 2023
21	02 December 2023
22	02 December 2023
22A	06 December 2025
22B	06 December 2025
22C	06 December 2025
22D	06 December 2025
22E	06 June 2026
22F	06 June 2026
23	03 September 2022
24	03 September 2022
25	06 December 2025
25A	06 December 2025

Page	Date Last Changed
25B	06 December 2025
26	06 December 2025
27	06 December 2025
28	06 December 2025
29	05 March 2022
30	05 March 2022
31	07 December2024
32	07 December2024
33	06 December 2025
34	06 December 2025
35	06 June 2026
35A	06 June 2026
35B	05 June 2021
36	05 June 2021
37	06 December 2008
38	06 December 2008
39	02 June 2018
40	02 June 2018
41	04 June 2016
42	04 June 2016
43	06 June 2026
44	06 June 2026
45	02 June 2018
46	02 June 2018
47	01 December 2018
48	01 December 2018
49	01 December 2018
50	01 December 2018
51	29 August 2020
52	29 August 2020

TABLE OF CONTENTS

	Page
Maps	4
Exceptionally Poor Rail Adhesion	6
Table A Diagrams	5
Special Working Arrangement	37
Local Instructions	39

LIST OF MODULE PAGES AND DATES

Page	Date Last Changed
1	**05 September 2026**
2	**05 September 2026**
3	05 December 2015
4	05 December 2015
5	02 December 2006
6	02 December 2006
7	02 December 2006
8	02 December 2006
9	02 December 2006
10	02 December 2006
11	06 December 2025
12	06 December 2025
13	05 March 2016
14	05 March 2016
15	31 August 2019
16	31 August 2019
17	06 September 2025
18	06 September 2025
19	06 June 2026
20	06 June 2026
21	**05 September 2026**
22	**05 September 2026**
23	04 June 2022
24	04 June 2022
25	04 March 2023
26	04 March 2023
27	07 December 2024
28	07 December 2024
29	01 March 2025
30	01 March 2025
31	07 December 2024
32	07 December 2024
33	30 November 2019
34	30 November 2019
35	02 March 2019
36	02 March 2019
37	07 June 2025
38	07 June 2025
39	**05 September 2026**
40	**05 September 2026**
41	**05 September 2026**
42	**05 September 2026**
43	02 September 2023
44	02 September 2023
45	04 December 2021
46	04 December 2021
47	07 March 2026
48	07 March 2026
49	**05 September 2026**
50	**05 September 2026**
51	02 March 2019
52	02 March 2019
53	07 December 2024

Page	Date Last Changed
53A	07 December 2024
53B	**05 September 2026**
54	**05 September 2026**
55	06 December 2025
56	06 December 2025
57	06 June 2026
57A	06 June 2026
57B	07 March 2026
57C	07 March 2026
57D	06 June 2026
58	06 June 2026
59	03 March 2018
60	03 March 2018
61	01 June 2024
62	01 June 2024
63	06 December 2025
64	06 December 2025
65	06 December 2025
66	06 December 2025
67	02 June 2018
68	02 June 2018
69	06 September 2025
70	06 September 2025
71	02 March 2024
72	02 March 2024
73	02 September 2023
74	02 September 2023
75	01 March 2025
76	01 March 2025
77	02 June 2018
78	02 June 2018
79	07 December 2024
80	07 December 2024
81	04 March 2023
81A	04 March 2023
81B	03 December 2022
82	03 December 2022
83	07 December 2024
84	07 December 2024
85	07 December 2024
86	07 December 2024
87	04 June 2016
88	04 June 2016
89	07 June 2025
90	07 June 2025
90A	06 December 2025
90B	06 December 2025
91	04 June 2016
92	04 June 2016
93	04 December 2021
93A	04 December 2021
93B	07 March 2026
94	07 March 2026

Page	Date Last Changed
95	01 March 2025
96	01 March 2025
97	**05 September 2026**
98	**05 September 2026**
99	06 June 2026
100	06 June 2026
101	07 June 2025
101A	07 June 2025
101B	02 March 2019
102	02 March 2019
103	07 March 2026
103A	07 March 2026
103B	07 March 2026
104	07 March 2026
105	07 June 2025
106	07 June 2025
107	01 March 2025
108	01 March 2025
109	07 June 2025
110	07 June 2025
111	07 December 2024
112	07 December 2024
113	07 June 2025
114	07 June 2025
115	07 June 2025
115A	07 June 2025
115B	04 December 2021
116	04 December 2021
117	04 June 2016
118	04 June 2016
119	03 December 2022
120	03 December 2022
121	07 December 2024
122	07 December 2024
123	07 June 2025
124	07 June 2025
125	28 November 2020
126	28 November 2020
127	06 September 2025
128	06 September 2025
129	01 June 2024
130	01 June 2024
131	31 August 2019
132	31 August 2019
132A	02 December 2017
132B	02 December 2017

Page	Date Last Changed
133	30 May 2020
134	30 May 2020
135	31 August 2019
136	31 August 2019
137	02 March 2019
138	02 March 2019
139	30 November 2019
140	30 November 2019
140A	30 November 2019
140B	30 November 2019
141	28 November 2020
142	28 November 2020
143	06 December 2025
144	06 December 2025
145	29 February 2020
146	29 February 2020
147	02 March 2019
148	02 March 2019
149	06 December 2014
149A	29 February 2020
149B	30 May 2020
150	05 March 2022
151	05 March 2022
152	30 May 2020
152A	03 June 2023
152B	03 June 2023
153	03 June 2023
154	03 June 2023
155	07 December 2013
156	07 December 2013
157	03 June 2017
158	03 June 2017
159	02 March 2019
160	02 March 2019
161	03 June 2023
162	03 June 2023
163	**05 September 2026**
164	**05 September 2026**
165	03 October 2009
166	03 October 2009
167	01 June 2024
168	01 June 2024
169	03 June 2023
170	03 June 2023

LOR	Seq.	Line of Route Description	ELR	Route	Last Updated
LN836	006	Doncaster, Marshgate Jn to Neville Hill East Jn.	DOL2	London North Eastern	18/11/2019

Location	Mileage M Ch	Running lines & speed restrictions	Signalling & Remarks
APCO Balise for static changeover	182 40		TCB York ROC, Leeds West WS (L) RA9 AC: York ECR = Automatic Power Change Over - Pantograph Lower
	184 08 *		DD=Down Doncaster
	184 16 *		UD=Up Doncaster
	184 50		
	184 54		
Leeds TSL OHNS	184 57		
Copley Hill West Jn	184 65		
	184 75 *		
	184 77 *		D/UCHC=Down/Up Copley Hill Chord
Holbeck Jn	185 01		
Copley Hill East Jn	185 02 *		UpHuddersfield: End of GSM-R area at 185m 51ch Down Huddersfield: Start of GSM-R area at 185m 51ch
	185 03 *		
	185 06 *		
	185 09		
	185 13		
	185 17 *		DHU=Down Huddersfield UHU=Up Huddersfield

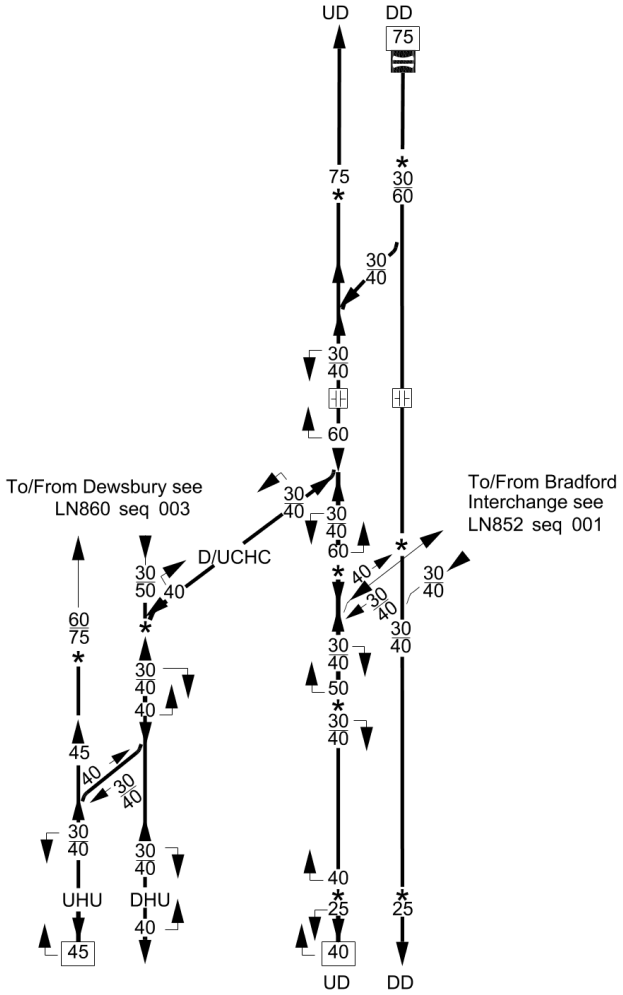

LOR	Seq.	Line of Route Description	ELR	Route	Last Updated
LN836	007	Doncaster, Marshgate Jn to Neville Hill East Jn.	DOL2 WRG	London North Eastern	11/07/2026

Location	Mileage M Ch	Running lines & speed restrictions	Signalling & Remarks
Whitehall West Jn	185 21 *	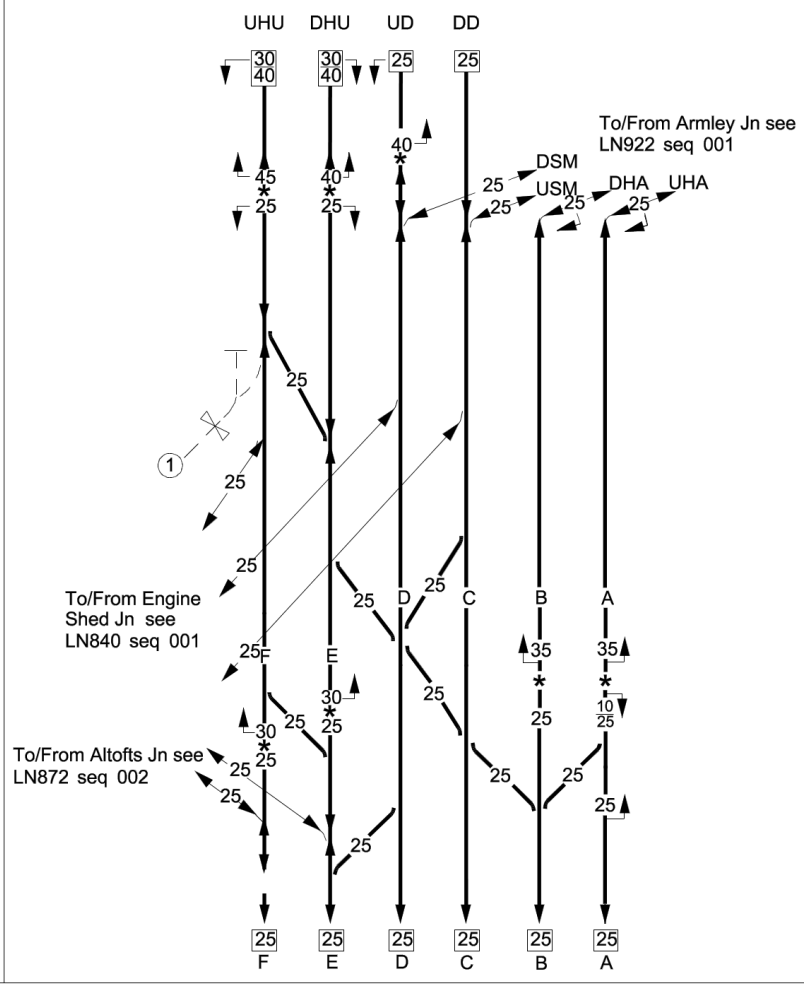	GSM-R
	185 24 *		TCB York ROC, Leeds West WS (L) RA9 AC: York ECR
	185 25		
	185 26		DD= Down Doncaster UD= Up Doncaster DHU= Down Huddersfield UHU= Up Huddersfield
Whitehall East Jn	185 28		DSM= Down Shipley Main USM= Up Shipley Main DHA= Down Harrogate UHA= Up Harrogate
	185 29		RA8
			(1) To/From Whitehall Goods Yard Private Sidings. ELR = WRG
	185 37 *		A= A Line B= B Line C= C Line D= D Line E= E Line F= F Line
	185 38 *		NOTE - Inbound differential speed (10/25) on approach to A to B line crossover (5518A)
	185 41 *		
Leeds West Jn	185 45		
	185 46		
ACPO Zone commencement (Selective)	185 46		= Automatic Power Change Over - Pantograph Lower

LOR	Seq.	Line of Route Description	ELR	Route	Last Updated
LN852	003	Holbeck Jn. to Bradford Interchange	LBE4 MRB	London North Eastern	02/02/2019

Location	Mileage M Ch	Running lines & speed restrictions	Signalling & Remarks
	191 74 *	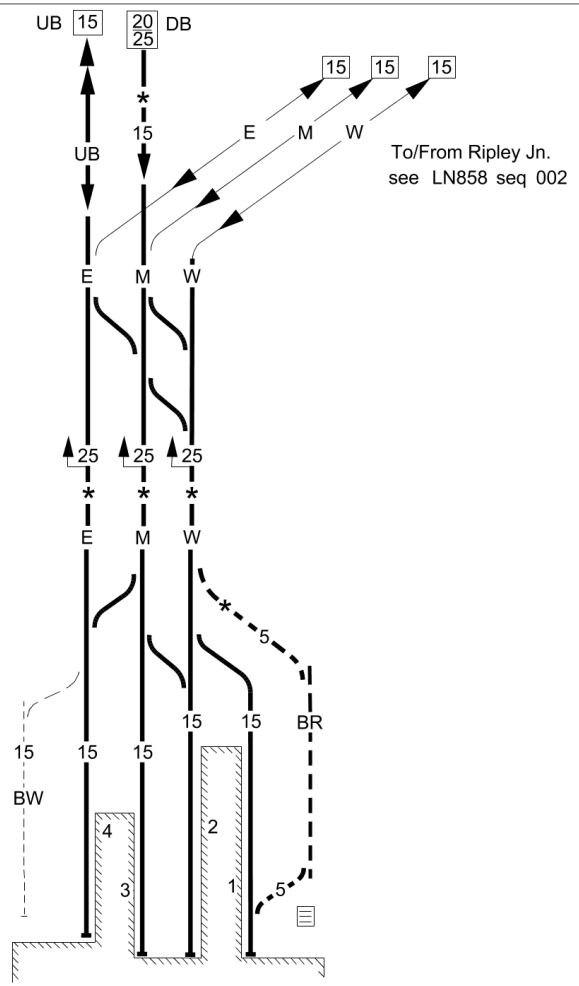	GSM-R TCB York ROC (HB MM) RA8 Halifax Workstation UB = Up Bradford DB = Down Bradford E = E line M = M line W = W line
Mill Lane Jn Change of milage	191 78 40 01		
	40 09 *		
	40 13 *		BW = Bradford Wall Siding = 138m / 150 yds BR = Bradford Engine Release Line = 155 / 170yds.
Bradford 'A' GF	40 26		PP - Permissive Working for all platforms - full use for class 1, 2, 3 (ECS), 5, 9 & 0 trains.
BRADFORD INTERCHANGE	40 27		

LOR	Seq.	Line of Route Description	ELR	Route	Last Updated
LN854	001	Hall Royd Jn. to Colton Jn.	MVN2	London North Eastern	04/07/2026

Location	Mileage M Ch	Running lines & speed restrictions	Signalling & Remarks
		UL&Y 55 MU70 / DL&Y 60 MU75 — To / from Todmorden / Gannow Jn see NW7001 seq 002	GSM-R TCB Preston SB (PN) RA9
	22 43 *		DL&Y = Down Lancashire & Yorkshire UL&Y = Up Lancashire & Yorkshire
Network Rail Route Boundary	22 62	North West & Central Region Eastern Region	York ROC (HG) Halifax Workstation
Weasel Hall Tunnel (100m / 109 yards)	23 12 to 23 17		
HEBDEN BRIDGE	23 50	1 / 2 / 15	See General instrcutions for SATWS details at Hebden Bridge
		HB 60 MU70	HB = Hebden Bridge Siding = 342 metres (374 yards)
MYTHOLMROYD	24 68	1 / 2	
Mytholmroyd HABD on DL&Y	25 00		
	25 00 *		Mytholmroyd Hot Axle Bearing Detectors (HABD) reporting to York ROC Halifax Workstation
Mytholmroyd HABD on UL&Y	25 66		
Sowerby Bridge Tunnel (600m / 657 yards)	27 60 to 28 10		
		60 MU80	
SOWERBY BRIDGE	28 51	1 / 2	
	29 18 *		
	29 19 *		DH = Down Halifax UH = Up Halifax
Milner Royd Jn	29 20	To / from Dryclough Jn. see LN858 seq 001 40 MU50 DH / 40 MU50 UH 40	
	29 29 *	60 UL&Y 60 / DL&Y	

LOR	Seq.	Line of Route Description	ELR	Route	Last Updated
LN854	002	Hall Royd Jn. to Colton Jn.	MVN2	London North Eastern	04/07/2026

Location	Mileage M Ch	Running lines & speed restrictions	Signalling & Remarks
			TCB York ROC (DH, HG, HM) RA9 Huddersfield WS GSM-R
Greetland Jn	30 77		See General instructions for SATWS details at Greetland Jn
Elland Tunnel (384m / 420 yards)	31 25 to 31 44		
Elland Brickyard R/G OMSL - X	32 69		BS = Bradley Single UH = Up Huddersfield
BRIGHOUSE	34 31		UH = Up Huddersfield DH = Down Huddersfield UHS = Up Huddersfield Slow UHF = Up Huddersfield Fast
Bradley Wood Jn	35 59		
Heaton Lodge Jn	37 20		DG = Down Greetland UG = Up Greetland DL&Y = Down Lancashire & Yorkshire UL&Y = Up Lancashire & Yorkshire
	37 37 *		
Heaton Lodge East Jn	37 48 *		

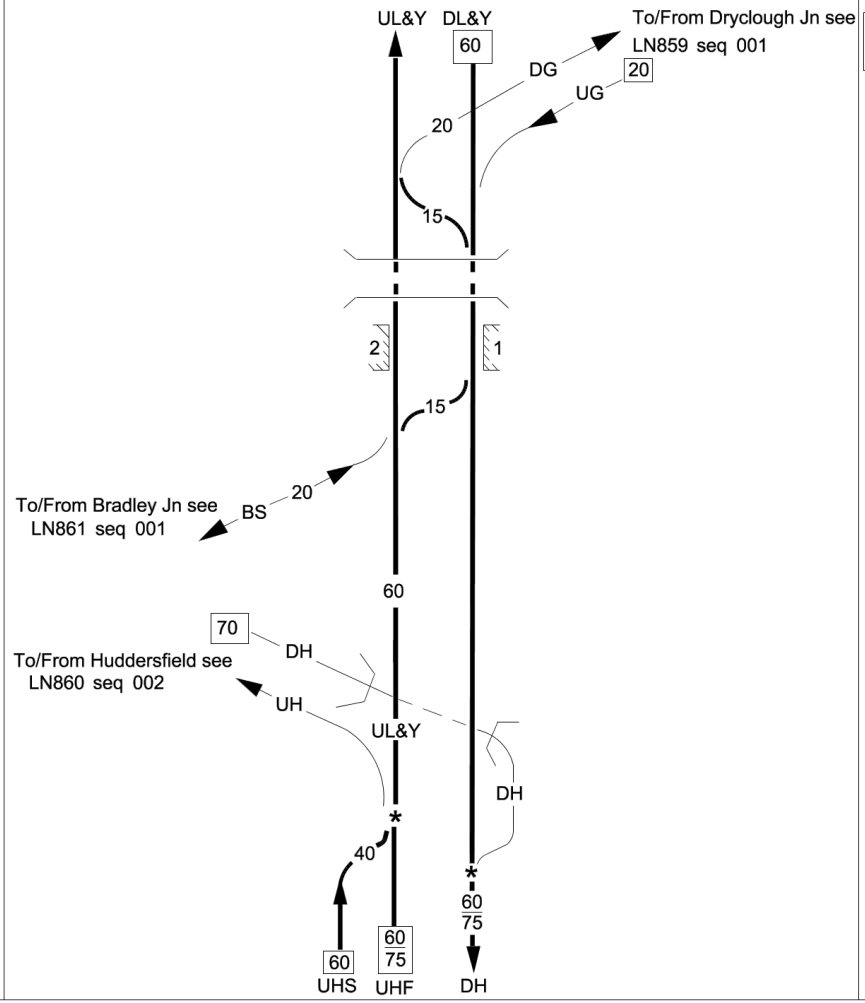

LOR	Seq.	Line of Route Description	ELR	Route	Last Updated
LN854	003	Hall Royd Jn. to Colton Jn.	MVN2	North & East	27/12/2025

Location	Mileage M Ch	Running lines & speed restrictions	Signalling & Remarks
MIRFIELD	38 30		TCB York ROC (HM) RA9 Huddersfield WS GSM-R
MIRFIELD P3	38 37		
Mirfield East Jn	39 20 39 26		
Thornhill LNW Jn	39 72		UH = Up Huddersfield DH = Down Huddersfield UHF = Up Huddersfield Fast UHS = Up Huddersfield Slow DL&Y = Down Lancashire & Yorkshire UL&Y = Up Lancashire & Yorkshire DL&Y/UH = Down Lancashire & Yorkshire/Up Huddersfield DC = Dewsbury Cement
Dewsbury East Jn	41 43		(NOTE- Part of table duplicated in LN860 seq 2/3)

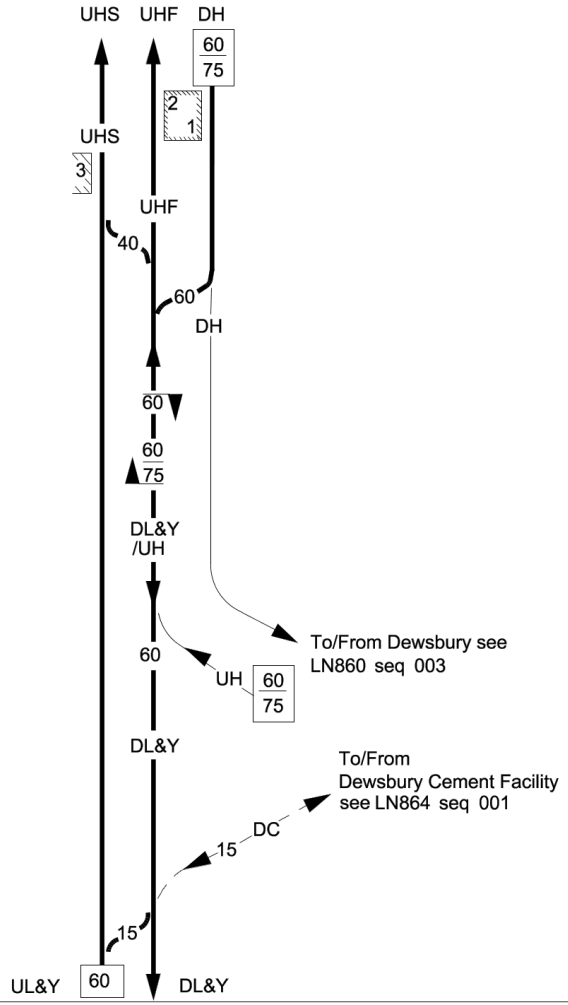

LOR	Seq.	Line of Route Description	ELR	Route	Last Updated
LN854	010	Hall Royd Jn. to Colton Jn.	NOC	London North Eastern	13/02/2026

Location	Mileage M Ch	Running lines & speed restrictions	Signalling & Remarks
	11 25 *		
Church Fenton Hot Axle Box Detector	11 08		
Church Fenton South Jn	10 77		
	10 66 *		
CHURCH FENTON	10 58 10 58 *		
	10 37		
Church Fenton North Jn	10 36		
	10 30 *		
	10 27		

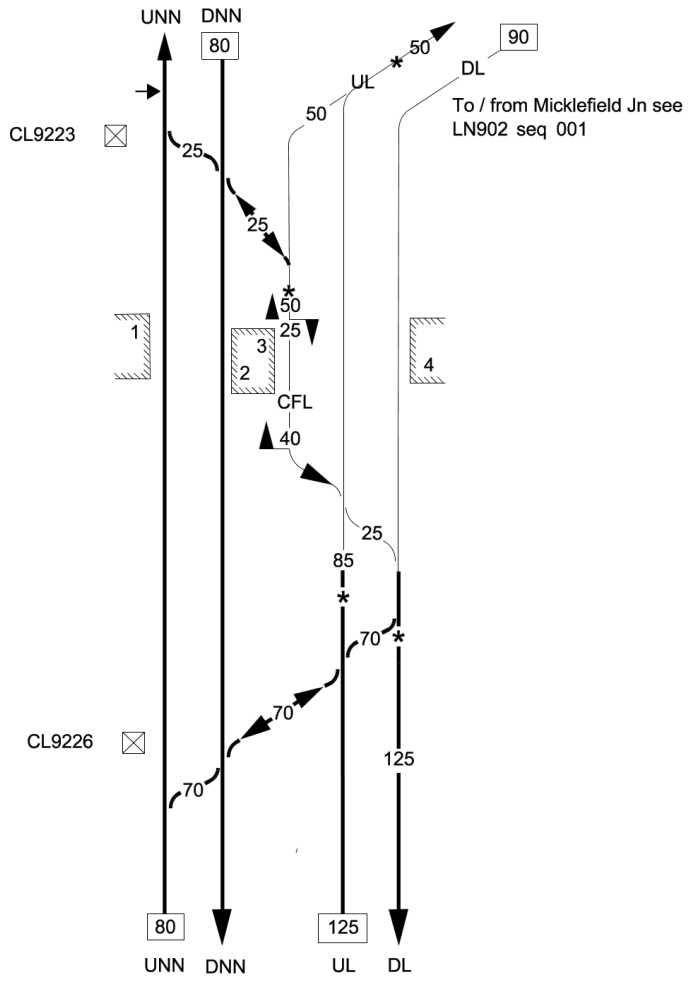

GSM-R

TCB	York ROC (CL)
RA9	Leeds East Worksation

☒ Lockout protection provided-See General instructions

UNN = Up Normanton
DNN = Down Normanton
UL = Up Leeds
DL = Down Leeds

CFPL = Church Fenton Loop
= 843m (Up direction to Micklefield Jn)
= 354m (Up direction to Milford)
= 176m (Down direction from Milford)

AC : York ECR

LOR	Seq.	Line of Route Description	ELR	Route	Last Updated
LN854	011	Hall Royd Jn. to Colton Jn.	NOC ECM4	London North Eastern	15/08/2026

Location	Mileage M Ch	Running lines & speed restrictions	Signalling & Remarks
ULLESKELF	8 70		
	7 31 *		
	6 40 *		
Colton South Jn	6 25		
	6 14		
	5 41 *		
Colton Jn	5 41		
Change of LOR, ELR and milage	182 79	To / from Hambleton North Jn	
Colton North Jn	183 65	ECML see LN600 seq 002	

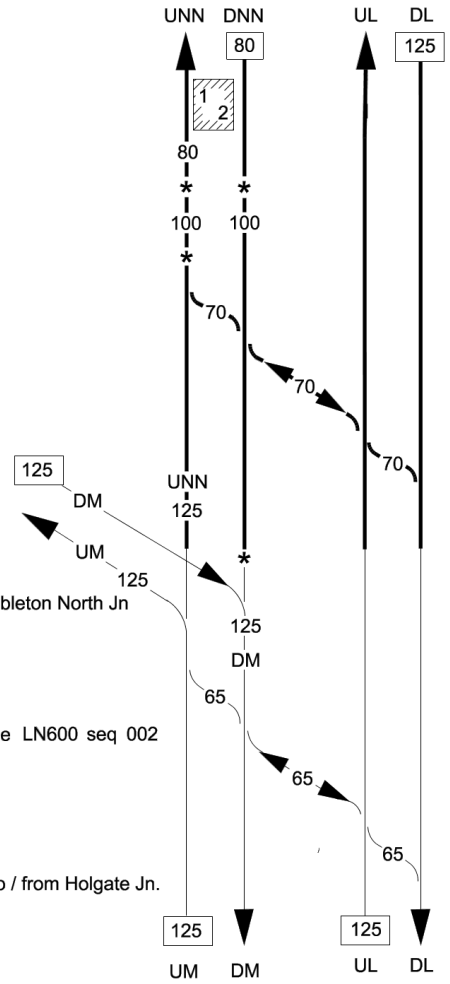

GSM-R

TCB	York ROC Leeds East WS (CL,AC)
RA9	AC. York ECR

TCB	York ROC
RA9	York Station Workstation (Y)

UNN = Up Normanton
DNN = Down Normanton
UL = Up Leeds
DL = Down Leeds

This page is left intentionally blank

LOR	Seq.	Line of Route Description	ELR	Route	Last Updated
LN859	001	Greetland Jn. to Dryclough Jn.	GRD	London North Eastern	04/07/2026

Location	Mileage M Ch	Running lines & speed restrictions	Signalling & Remarks
Greetland Jn	1 11		TCB York ROC (DH) RA8 Huddersfield WS GSM-R UL&Y = Up Lancashire & Yorkshire DL&Y = Down Lancashire & Yorkshire UGR = Up Greetland DGR = Down Greetland
	1 06 *		See General instructions for SATWS details at Greetland Jn York ROC (DH / MM) Halifax Workstation
Salterhebble Down and Up Tunnels (83m / 91 yards)	0 25 to 0 21		
	0 07 *		DH = Down Halifax UH = Up Halifax
	0 04 *		
Dryclough Jn	0 00		

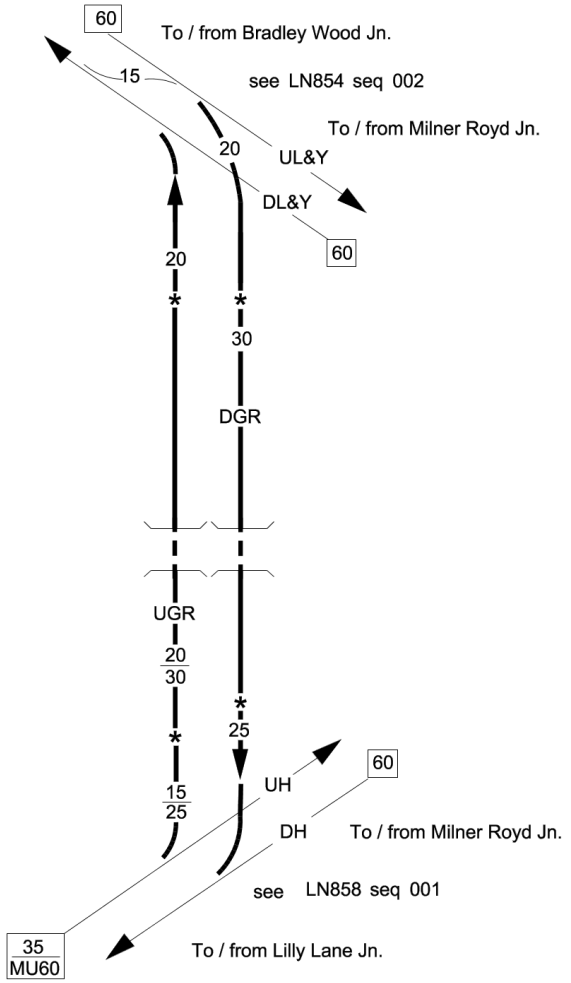

LOR	Seq.	Line of Route Description	ELR	Route	Last Updated
LN898	004	Neville Hill East Jn to Hull	HUL1	London North Eastern	22/11/2025

Location	Mileage M Ch	Running lines & speed restrictions	Signalling & Remarks
		UH DH 65 SP 70	TCB Selby SB (S) RA8 GSM-R
	29 00 *	65 SP 75 / * 80	DH = Down Hull UH = Up Hull
Lund Lane LC (UWC)	28 49	T	
	28 39 *	*	
	28 25 *	* 75 SP 90	
Cliffe LC (CCTV)	28 02		
HABD	28 00		
Hoton House Farm LC (UWC)	27 28	T	
	27 16 *	75 *	
Hagg Lane LC (AHBC-X)	26 77	X30 X30	
	26 45 *	90 * *	
Innermore Lane (OMSL - X)	26 45	X30 X30	
Woodhall Lane LC (AHBC-X)	25 77	X30 X30	OMSL - See General Instruction
	25 25 *	* 75 SP 90	
Wressle LC (AHBC-X)	25 03	X30 X30	
WRESSLE	25 03	X30	
Cross Common LC (AHBC-X)	24 52	75 X30	

LOR	Seq.	Line of Route Description	ELR	Route	Last Updated
LN898	005	Neville Hill East Jn to Hull	HUL1	London North Eastern	11/05/2026

Location	Mileage M	Ch		Running lines & speed restrictions	Signalling & Remarks
					TCB Selby SB (S) RA8 — GSM-R
Rowland Hall LC (AHBC-X)	24	06			DH = Down Hull
Brind (UWC)	23	15	T		UH = Up Hull
	22	45	*		OMSL - See General Instructions
HOWDEN	22	27			
Howden LC (CCTV)	22	27			
Swan Fleet Lane (UWC)	22	21	T		
Thorpe Farm (UWC)	21	56	T		
	21	54	*		
Burland Lane (UWC OMSL - X)	20	60	T		TCB York ROC (SG / GH) Brough Workstation
	20	52	*		
Filbert Grove LC (UWC)	20	26	T		
Southfields LC (UWC)	19	79	T		
Eastrington LC (OD)	19	23			
EASTRINGTON	19	17	*		
	18	35	*		
Lilac Villa LC (UWC OMSL - X)	18	07	T		
Bennetland LC (UWC)	17	39	T		
Bellasize LC (R/G) Pedestrians only	17	23			
Bellasize LC (UWC)	17	23	T		DSM = Down Saltmarshe
				To/From Thorne Jn LN912 seq 002	USM = Up Saltmarshe
Gilberdyke Jn	17	07			
					X Lockout Device Type K
	17	04	*		
GILBERDYKE	16	76			

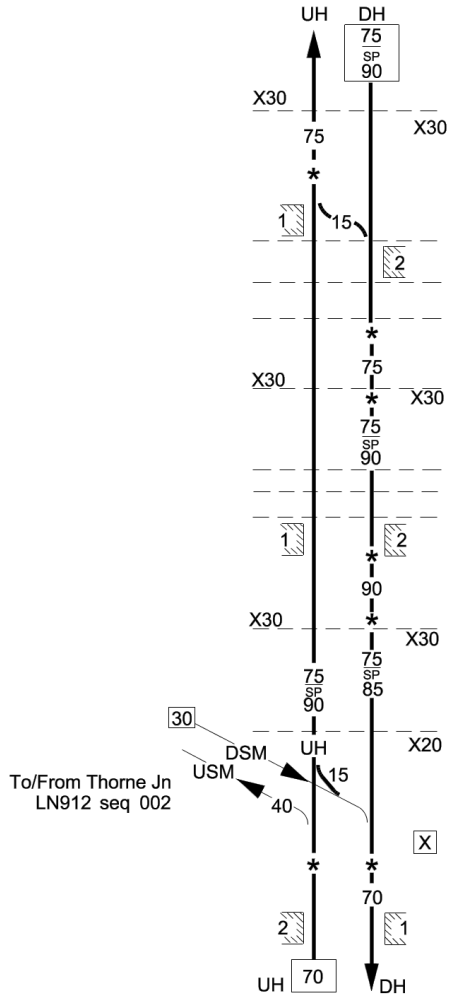

LN922 - WHITEHALL WEST JN TO HELLIFIELD SOUTH JN

SKIPTON

Platform Lockouts

Lockouts are provided which prevent trains being signalled into or out of the platforms shown:-

Platform 1 }

Platform 2 } Entirely separate systems are

Platform 3 } provided for each platform.

Platform 4 }

The LOD protection for platform 1 covers clear of 5149 points to the buffer stop in platform 1

The lockouts must be used to protect staff who are to carry out work such as:-

watering coaching stock at track level,

fitters working on trains,

clearing litter from the track,

white lining platform edges.

If a lockout has been used, it will not be necessary to appoint a COSS. Where work is to take place on train, or a train is standing in a platform whilst work is in progress, a NOT TO BE MOVED board must be securely fitted to the Drivers cab in such a position that is is clearly visible to the Driver of the train as well as being visible along the platform.

Where work is to take place which will involve staff going onto the line in platform 2 or platform 3, **both** platform 2 and platform 3 lockouts must be taken.

The operation of the lockout is as follows:-

The Signaller referred to below, is located in York ROC, on the Leeds North West Workstation.

The person taking the lockout must telephone the Signaller, identify himself by name and employing organisation, say what is to be done and ask for the lockout to be given.

When the Signaller is able to give the lockout, the light on the instrument will light; the button must then be pressed and the key turned and withdrawn. The Signaller must be advised when the key has been withdrawn.

The key must be retained by the person removing it and not left in the instrument cupboard, as long as it is out of the instrument the platforms are protected from train movements by the signalling system.

The same person must normally remain in charge of the key throughout the time it is out of the instrument; if this is not possible, he must, before transferring the key, telephone the Signaller, identify himself by name and employing organisation and tell the Signaller to whom the key is to be transferred; that person must then identify himself by name and employing organisation.

When the work is complete, the person who has charge of the key must telephone the Signaller, identify himself by name and employing organisation, and give the Signaller an assurance that all staff and equipment are clear of the line.

When instructed to do so, the key must be returned to the instrument and turn it to the lock position.

The platforms are no longer protected.

ALWAYS ENSURE THAT YOU KNOW EXACTLY WHAT IS PROTECTED

Dated: 11/07/26

LN922 - WHITEHALL WEST JN TO HELLIFIELD SOUTH JN

SKIPTON

Detaching of Cripples. A Down train which activates the Hot Axle Box Detector will be stopped at L.4031 signal for initial examination. If it has to detach cripples, it will be routed via the Down Shipley Fast line and detached vehicles must be placed in the Shunt Spur of the Up Sidings. If there are too many vehicles in front of the cripple, and it is necessary to place vehicles on the Up Shipley Main, such vehicles must be secured by the application of a sufficient number of handbrakes. It may be necessary, after vehicles have been placed in the Shunt Spur, to obtain the Signaller's permission to pass L4553 signal in accordance with Rule Book Module S5.

An Up train which activates the HABD will be stopped for initial examination at L4046 signal. If there are cripples to detach, these must be placed in the Up Sidings.

Rylstone Branch: Any train or locomotive which passes onto the branch must pass completely beyond L4039 signal before returning. Locomotives (only), coupled together if more than one, may be stabled in the platform at Skipton beyond L4039 signal. All locomotives which pass onto the branch at Skipton together must also return together and locomotives must not be left at Rylstone for a later train.

Dated: 28/12/18

LN924 - APPERLEY JN. TO ILKLEY

Greenbottom Tunnel To MENSTON

Greenbottom Tunnel, Guiseley And Bridge 22, Otley Road, Menston

Entry into the above bridge and tunnel on foot is forbidden unless protection is provided in accordance with Rule Book, Module TS1 Regulation 13.2, Handbook 8, Handbook 21 or the line is under a T3 possession, or unless it is absolutely necessary in accordance with the Rules and Regulations.

Dated: 06/12/14

LIST OF MODULE PAGES AND DATES

Page	Date Last Changed
1	**05 September 2026**
2	**05 September 2026**
3	05 December 2015
4	05 December 2015
5	02 December 2006
6	02 December 2006
7	02 December 2006
8	02 December 2006
9	28 November 2020
10	28 November 2020
11	06 December 2014
12	06 December 2014
13	05 March 2022
13A	05 March 2022
13B	01 March 2025
14	01 March 2025
15	07 June 2025
16	07 June 2025
17	06 December 2025
18	06 December 2025
19	07 September 2024
20	07 September 2024
21	05 March 2022
22	05 March 2022
23	05 March 2022
24	05 March 2022
25	05 March 2022
26	05 March 2022
27	04 March 2023
28	04 March 2023
29	07 December 2024
30	07 December 2024
31	05 March 2022
32	05 March 2022
32A	05 March 2022
32B	05 March 2022
33	07 March 2026
34	07 March 2026
35	05 March 2022
36	05 March 2022
37	07 June 2025
38	07 June 2025
38A	02 December 2017
38B	02 December 2017
39	06 June 2026
40	06 June 2026
41	02 September 2023
42	02 September 2023
43	07 June 2025
44	07 June 2025
45	04 March 2023
46	04 March 2023
47	01 June 2019

Page	Date Last Changed
48	01 June 2019
49	03 September 2022
50	03 September 2022
51	07 December 2024
52	07 December 2024
53	27 February 2021
54	27 February 2021
55	05 March 2022
56	05 March 2022
57	04 March 2023
58	04 March 2023
59	05 March 2022
60	05 March 2022
61	07 June 2025
62	07 June 2025
63	02 December 2023
64	02 December 2023
65	07 December 2024
66	07 December 2024
67	03 June 2023
68	03 June 2023
69	05 March 2022
70	05 March 2022
71	07 December 2024
71A	07 December 2024
71B	07 December 2024
72	07 December 2024
73	07 June 2025
74	07 June 2025
74A	06 June 2026
74B	06 June 2026
74C	07 June 2025
74D	07 June 2025
75	04 June 2016
76	04 June 2016
77	07 June 2025
78	07 June 2025
79	06 September 2025
80	06 September 2025
81	06 September 2025
82	06 September 2025
83	02 December 2006
84	02 December 2006
85	31 August 2019
86	31 August 2019
87	07 September 2024
88	07 September 2024
89	27 February 2021
90	27 February 2021
91	05 June 2021
92	05 June 2021
93	05 March 2022
94	05 March 2022

Page	Date Last Changed
95	02 March 2019
96	02 March 2019
97	07 December 2013
98	07 December 2013
99	06 December 2014
100	06 December 2014
101	06 December 2014
102	06 December 2014
103	03 March 2018
104	03 March 2018
105	03 March 2018
106	03 March 2018
107	03 March 2018
108	03 March 2018
109	06 December 2014
110	06 December 2014

Page	Date Last Changed
111	04 June 2016
112	04 June 2016
113	05 June 2021
114	05 June 2021
115	05 March 2022
116	05 March 2022
117	04 March 2023
118	04 March 2023
119	04 March 2023
119A	04 March 2023
119B	01 March 2025
119C	01 March 2025
120	01 March 2025
121	01 March 2025
122	04 March 2023
122A	04 March 2023

LIST OF MODULE PAGES AND DATES

Page	Date Last Changed
1	**05 September 2026**
2	**05 September 2026**
2A	07 December 2024
2B	07 December 2024
3	29 February 2020
4	29 February 2020
5	06 September 2025
6	06 September 2025
7	06 September 2025
8	06 September 2025
9	06 September 2025
10	06 September 2025
11	06 September 2025
12	06 September 2025
13	06 September 2025
14	06 September 2025
15	06 September 2025
16	06 September 2025
17	02 September 2023
18	02 September 2023
19	04 March 2023
20	04 March 2023
21	07 June 2025
21A	07 June 2025
21B	04 September 2021
22	04 September 2021
23	07 June 2025
24	07 June 2025
25	07 June 2025
25AB	07 June 2025
25AC	07 June 2025
25A	07 June 2025
25B	07 March 2026
25C	07 March 2026
25D	07 June 2025
25E	07 June 2025
25F	07 March 2026
25G	07 March 2026
25H	07 June 2025
25I	07 June 2025
25J	07 March 2026
25K	07 March 2026
25L	07 June 2025
25M	07 June 2025
25N	06 September 2025
26	06 September 2025
27	06 September 2025
28	06 September 2025
29	06 September 2025
30	06 September 2025
31	01 March 2025
32	01 March 2025
33	01 March 2025
33A	01 March 2025

Page	Date Last Changed
33B	07 September 2024
33C	07 September 2024
34	01 June 2024
35	01 June 2024
35A	01 June 2024
35B	01 June 2024
35C	01 June 2024
35D	01 June 2024
35E	01 June 2024
35F	01 June 2024
35G	01 June 2024
35H	01 June 2024
35I	01 June 2024
35J	01 June 2024
35K	06 December 2025
36	06 December 2025
37	06 December 2025
37A	06 December 2025
37B	02 December 2023
37C	02 December 2023
37D	02 December 2023
37E	02 December 2023
37F	02 December 2023
37G	02 December 2023
37H	02 December 2023
37I	02 December 2023
37J	02 December 2023
37K	02 December 2023
37L	02 December 2023
37M	02 December 2023
37MA	02 December 2023
37MB	02 December 2023
37N	02 December 2023
37O	02 December 2023
37P	02 December 2023
37Q	02 December 2023
37R	02 December 2023
37S	02 December 2023
37T	02 December 2023
37U	02 December 2023
37V	02 December 2023
37W	02 December 2023
37X	02 December 2023
37Y	02 December 2023
37Z	02 December 2023
37ZA	02 December 2023
37ZB	02 December 2023
37ZC	02 December 2023
37ZD	01 March 2025
37ZE	01 March 2025
37ZF	02 December 2023
37ZG	02 December 2023
37ZH	02 December 2023
37ZI	02 December 2023
37ZJ	02 December 2023

37ZK	02 December 2023
37ZL	02 December 2023
37ZM	02 December 2023
37ZN	02 December 2023
37ZO	02 December 2023
37ZP	02 December 2023
37ZQ	02 December 2023
37ZR	02 December 2023
37ZS	02 December 2023
38	01 June 2024
39	01 June 2024
40	01 June 2024
41	01 June 2024
41A	01 June 2024
41B	01 June 2024
42	06 June 2026
43	06 June 2026
44	04 March 2023
45	03 June 2023
46	06 June 2026
46A	06 June 2026
47	03 June 2023
48	30 May 2020
48A	06 June 2026
48B	06 June 2026
48C	30 May 2020
48D	30 May 2020
48E	06 June 2026
48F	06 June 2026
48G	06 June 2026
48H	06 June 2026
48I	30 May 2020
48J	30 May 2020
49	01 September 2018
50	01 September 2018
51	05 March 2015
51A	05 March 2015
51B	03 June 2023
52	03 June 2023
53	04 March 2023
54	04 March 2023
55	05 December 2015
56	05 December 2015
56A	03 June 2023
56B	03 June 2023
56C	03 June 2023
56D	03 June 2023
56E	03 December 2016
56F	03 December 2016
56G	04 June 2022
56H	04 June 2022
56I	04 March 2023
56J	04 March 2023
56K	06 September 2014
56L	06 September 2014
57	07 December 2024
58	07 December 2024
59	02 June 2018

60	02 June 2018
61	03 June 2023
61A	03 June 2023
61B	03 June 2023
61C	03 June 2023
61D	02 December 2017
61E	02 December 2017
61F	02 June 2018
61G	02 June 2018
61H	07 September 2024
61I	07 September 2024
61J	07 September 2024
61K	07 September 2024
62	03 June 2023
63	03 June 2023
64	04 March 2023
65	04 March 2023
66	05 June 2021
66A	05 June 2021
66B	03 June 2023
67	03 June 2023
67A	03 June 2023
67B	03 June 2023
67C	02 December 2017
67D	04 June 2022
67E	04 June 2022
67F	04 June 2022
67G	04 June 2022
67H	04 March 2023
67I	04 March 2023
67J	01 June 2024
68	01 June 2024
69	04 March 2023
70	04 March 2023
71	05 June 2021
72	05 June 2021
72A	05 June 2021
72B	05 June 2021
73	03 June 2023
73A	03 June 2023
73B	03 June 2023
73C	03 June 2023
73D	02 December 2017
73E	02 June 2018
73F	02 June 2018
73G	05 June 2021
73H	05 June 2021
73I	02 December 2017
73J	02 December 2017
73K	03 March 2018
73L	01 March 2025
73M	01 March 2025
73N	01 March 2025
73O	01 March 2025
73P	01 March 2025
73Q	01 March 2025
74	03 March 2018

75	03 March 2018
76	03 March 2018
77	03 March 2018
78	03 March 2018
79	03 March 2018
80	03 March 2018
81	04 September 2021
82	04 September 2021
83	04 September 2021
84	04 September 2021
85	03 March 2018
86	03 March 2018
87	07 June 2025
88	07 June 2025
88A	07 June 2025
88B	07 June 2025
89	07 June 2025
90	07 June 2025
91	07 June 2025
92	07 June 2025
93	07 June 2025
94	07 June 2025
95	07 June 2025
96	07 June 2025
97	07 June 2025
98	07 June 2025
99	07 June 2025
100	07 June 2025
101	07 June 2025
102	07 June 2025
103	07 June 2025
104	07 June 2025
105	07 June 2025
106	07 June 2025
106A	07 June 2025
106B	07 June 2025
106C	07 June 2025
106D	07 June 2025
106E	07 June 2025
106F	07 June 2025
107	04 March 2023
108	04 March 2023
109	05 June 2021
110	05 June 2021
111	05 June 2021
112	05 June 2021
113	30 November 2019
114	30 November 2019
115	05 June 2021
116	05 June 2021
117	05 June 2021
118	05 June 2021
119	05 June 2021
120	05 June 2021
121	04 March 2023
122	04 March 2023
123	05 June 2021

124	05 June 2021
125	05 June 2021
126	05 June 2021
127	03 December 2016
128	03 December 2016

THIS PAGE IS INTENTIONALLY BLANK